SAN FRANCISCO
PLANNING DEPARTMENT

1650 Mission St.
Suite 400
San Francisco,
CA 94103-2479

Reception:
415.558.6378

Fax:
415.558.6409

Planning
Information:
415.558.6377

Executive Summary
Conditional Use Authorization and Coastal Zone Permit to Allow a Wireless Telecommunications Services (WTS) Facility

HEARING DATE: JULY 1, 2010

Date:	June 24, 2010
Case No.:	**2009.1002CP**
Project Address:	**100 Armory Drive**
Current Zoning:	P (Public Use) District OS (Open Space) Height and Bulk District Coastal Zone Permit Area
Block/Lot:	7281/004
Project Sponsor:	Tom Swarner on the behalf of T-Mobile 2000 2615 Camino Lenada Oakland, CA 94611
Staff Contact:	Adrian C. Putra – (415) 575-9079 adrian.putra@sfgov.org
Recommendation:	**Approve the Conditional Use Authorization with Conditions and Approve the Coastal Zone Permit.**

PROJECT DESCRIPTION

The proposal is to establish a new Wireless Telecommunications Services (WTS) facility operated by T-Mobile and consisting of six panel antennas mounted on a 53′ tall monopole with related equipment cabinets located at grade, and within an approximately 19′-6″ by 31′ enclosed lease area. The new antennas would have a maximum height of approximately 45′-0″ above grade. Each antenna measures approximately 3′-9″ long by 1′-0″ wide by 8″ inches thick. The six proposed panel antennas to be installed by T-Mobile will be mounted to an existing monopole that contains Sprint-Nextel antennas and is located at the south property line and behind the main armory building situated at the center of the site. The Project includes a local coastal zone permit.

SITE DESCRIPTION AND PRESENT USE

The project site is located at the end of Armory Drive which is a private street located west of Skyline Boulevard between Sloat Boulevard and Great Highway, and south of the San Francisco Zoo. The project site is occupied by the National Guard and contains three buildings, and three WTS facilities (Verizon Wireless, AT&T, and Sprint-Nextel) that each have their antennas mounted onto their own individual monopole. The site is located on a heavily wooded hill above Skyline Boulevard.

SURROUNDING PROPERTIES & NEIGHBORHOOD

There are no residential uses within a 500-foot radius of the site. Lake Merced and Harding Park Golf Course are located east of the site, the San Francisco Zoo is located north of the site, and City and State owned property is located west and south of the site. Heavily wooded open space and wide arterial streets characterize the area.

ENVIRONMENTAL REVIEW STATUS

The San Francisco Planning Department (hereinafter "Department") determined the application to be categorically exempt from the environmental review process (CEQA) pursuant to exemption Classes 1, 3 and 11 of Title 14 of the California Administrative Code.

HEARING NOTIFICATION REQUIREMENTS

TYPE	REQUIRED PERIOD	REQUIRED NOTICE DATE	ACTUAL NOTICE DATE	ACTUAL PERIOD
Classified News Ad	20 days	June 9, 2010	June 9, 2010	20 days
Posted Notice	20 days	June 9, 2010	June 9, 2010	20 days
Mailed Notice	20 days	June 9, 2010	June 9, 2010	20 days

PUBLIC COMMENT

To date the Department has not received any public comment regarding the project. Additionally, a Community Outreach Meeting was conducted for the proposed project. This meeting was held at 7:00 PM on Wednesday, February 17, 2010, at the Armory Facility Lower Classroom, 100 Armory Road, San Francisco, CA 94117. According to the Project Sponsor no neighbors attended the meeting.

ISSUES AND OTHER CONSIDERATIONS

- The proposal will have minimal visual impacts to the surrounding neighborhood since the project site has ample landscaping and open space, and is minimally visible from street view.
- The Department is not aware of opposition to the project.

REQUIRED COMMISSION ACTION

Pursuant to Planning Code Section 234.2(a) and 303, Conditional Use authorization is required to establish a new WTS facility consisting of six panel antennas and related equipment cabinets in the P District, and OS Height and Bulk District.

The Commission must approve the Coastal Zone Permit, pursuant to Planning Code Section 330.1, in order establish a new WTS facility consisting of six panel antennas and related equipment cabinets in the Coastal Zone Permit Area.

BASIS FOR RECOMMENDATION

The Department believes this project is necessary and/or desirable under Section 303 of the Planning Code for the following reasons:

- The Project complies with the applicable requirements of the Planning Code Code, General Plan Policies, and Western Shoreline Area Plan.
- The project meets the criteria established under the 1996 Wireless Telecommunications Services Facilities Siting Guidelines, and it is consistent with the objectives and policies of the Commerce and Industry Element, the Community Safety Element, the Residence Element, and the Urban Design Element of the General Plan.
- The Project Site is a Location Preference Number 1, as it is a preferred location as a publicly used structure (USA National Guard facility).
- The project is desirable as it will improve upon the existing T-Mobile wireless communications network.

RECOMMENDATION:	**Approval the Conditional Use Authorization with Conditions and Approve the Coastal Zone Permit**

Exhibit Checklist

- ☒ Executive Summary
- ☒ Draft Motion
- ☐ Environmental Determination
- ☒ Zoning District Map
- ☐ Height & Bulk Map
- ☒ Parcel Map
- ☐ Sanborn Map
- ☒ Aerial Photo
- ☒ Context Photos
- ☒ Site Photos
- ☒ Project sponsor submittal
  - Drawings: Existing Conditions
    - ☒ Check for legibility
  - Drawings: Proposed Project
    - ☒ Check for legibility
- ☐ Public Correspondence
- ☒ Coverage Maps
- ☒ RF Report and DPH Evaluation
- ☒ Notice of Community Outreach Meeting

Exhibits above marked with an "X" are included in this packet _____
Planner's Initials

ACP

SAN FRANCISCO
PLANNING DEPARTMENT

Subject to: (Select only if applicable)

☐ Inclusionary Housing (Sec. 315)
☐ Jobs Housing Linkage Program (Sec. 313)
☐ Downtown Park Fee (Sec. 139)
☐ First Source Hiring (Admin. Code)
☐ Child Care Requirement (Sec. 314)
☐ Other

1650 Mission St.
Suite 400
San Francisco,
CA 94103-2479

Reception:
415.558.6378

Fax:
415.558.6409

Planning
Information:
415.558.6377

Planning Commission Motion

HEARING DATE: JULY 1, 2010

Date:	June 24, 2010
Case No.:	**2009.1002CP**
Project Address:	**100 Armory Drive**
Current Zoning:	P (Public Use) District OS (Open Space) Height and Bulk District
Block/Lot:	7281/004
Project Sponsor:	Tom Swarner on the behalf of T-Mobile 2000 2615 Camino Lenada Oakland, CA 94611
Staff Contact:	Adrian C. Putra – (415) 575-9079 adrian.putra@sfgov.org

ADOPTING FINDINGS RELATING TO THE APPROVAL OF A CONDITIONAL USE AUTHORIZATION UNDER PLANNING CODE SECTIONS 234.2(a) AND 303 TO ESTABLISH A NEW WIRELESS TELECOMMUNICATIONS SERVICES (WTS) FACILTY CONSISTING SIX PANEL ANTENNAS MOUNTED ON A 53-FEET TALL MONOPOLE WITH RELATED EQUIPMENT CABINETS LOCATED AT GRADE, AS PART OF THE T-MOBILE TELECOMMUNICATIONS NETWORK IN A P (PUBLIC USE) ZONING DISTRICT, COASTAL ZONE PERMIT AREA, AND A OS (OPEN SPACE) HEIGHT AND BULK DISTRICT.

PREAMBLE

On October 22, 2009, Tom Swarner on the behalf of T-Mobile (hereinafter "project sponsor"), made an application (hereinafter "application"), for Conditional Use authorization on the property at **100 Armory Drive, Lot 004 in Assessor's Block 7281**, (hereinafter "project site") to establish a new wireless telecommunications services (WTS) facility consisting of six panel antennas mounted on a 53-feet tall monopole and related equipment cabinets located at grade, as part of the T-Mobile wireless telecommunications network in a P (Public Use) Zoning District, Local Coastal Zone Permit Area and a OS (Open Space) Height and Bulk District, in general conformity with plans filed with the Application and labeled "EXHIBIT B" (hereinafter "Project").

The San Francisco Planning Department (hereinafter "Department") determined the application to be categorically exempt from the environmental review process (CEQA) pursuant to exemption Classes 1, 3 and 11 of Title 14 of the California Administrative Code.

On July 1, 2010, the Commission conducted a duly noticed public hearing at a regularly scheduled meeting on Conditional Use Application No. 2009.1002CP.

The Commission has heard and considered the testimony presented to it at the public hearing and has further considered written materials and oral testimony presented on behalf of the applicant, Department staff, and other interested parties.

MOVED, that the Commission hereby authorizes the Conditional Use requested in Application No. 2009.1002CP, subject to the conditions contained in "EXHIBIT A" of this motion, based on the following findings:

FINDINGS

Having reviewed the materials identified in the preamble above, and having heard all testimony and arguments, this Commission finds, concludes, and determines as follows:

1. The above recitals are accurate and constitute findings of this Commission.

2. **Site Description and Present Use.** The project site is located at the end of Armory Drive which is a private street located west of Skyline Boulevard between Sloat Boulevard and Great Highway, and south of the San Francisco Zoo. The project site is occupied by the National Guard and contains three buildings, and three WTS facilities (Verizon Wireless, AT&T, and Sprint-Nextel) that each have their antennas mounted onto their own individual monopole. The site is located on a heavily wooded hill above Skyline Boulevard.

3. **Surrounding Properties and Neighborhood**. There are no residential uses within a 500-foot radius of the site. Lake Merced and Harding Park Golf Course are located east of the site, the San Francisco Zoo is located north of the site, and City and State owned property is located west and south of the site. Heavily wooded open space and wide arterial streets characterize the area.

4. **Proposal.** The proposal is to establish a new Wireless Telecommunications Services (WTS) facility operated by T-Mobile and consisting of six panel antennas mounted on a 53′ tall monopole with related equipment cabinets located at grade, and within an approximately 19′-6″ by 31′ enclosed lease area. The new antennas would have a maximum height of approximately 45′-0″ above grade. Each antenna measures approximately 3′-9″ long by 1′-0″ wide by 8″ inches thick. The six proposed panel antennas to be installed by T-Mobile will be mounted to an existing monopole that contains Sprint-Nextel antennas and is located at the south property line and behind the main armory building situate at the center of the site. The Project includes a local coastal zone permit.

5. **Past History and Actions.** The Planning Commission held a duly advertised public hearing on August 15, 1996 to consider adoption of guidelines for the siting of WTS facilities in the City which would include standard conditions of approval for wireless communications facilities which are regulated by the FCC and required to meet the health and safety standards.

   The Planning Commission, by Resolution No. 14182, adopted the proposed WTS Facilities Siting Guidelines on August 15, 1996. The sample conditions of approval presented in the Guidelines form the basis for the development of conditions of approval for this Application and Motion.

   On June 13, 1996, the Commission conducted a duly noticed public hearing at a regularly scheduled meeting on the application for a Conditional Use pursuant to Planning Code Sections 234.2(a) to install a wireless transmission facility consisting of 12 antennas attached to a 40 foot tall monopole and a base transceiver station on the grounds of the California National Guard Armory at 100 Armory Drive, as part of the Cellular One (now "AT&T") telecommunications network.

   On March 20, 1997, the Commission conducted a duly noticed public hearing at a regularly scheduled meeting on the application for a Conditional Use pursuant to Planning Code Sections 234.2(a) to install a wireless transmission facility consisting of three (3) antennas attached on the top of a proposed 50 foot tall monopole and a base transceiver station in a fenced area at the base of the monopole on the grounds of the California National Guard Armory at 100 Armory Drive, as part of the Sprint-Nextel telecommunications network.

   On March 20, 1997, the Commission conducted a duly noticed public hearing at a regularly scheduled meeting on the application for a Conditional Use pursuant to Planning Code Sections 234.2(a) to install a wireless transmission facility consisting of three (3) antennas attached on the top of a proposed 50 foot tall monopole and a base transceiver station in a fenced area at the base of the monopole on the grounds of the California National Guard Armory at 100 Armory Drive, as part of the Sprint-Nextel telecommunications network.

6. **P (Public Use) Districts – Conditional Use Required.** In addition to the use districts otherwise established by this Code, there shall also be in the City a Public Use District herein referred to as a "P District," to apply to land that is owned by a governmental agency and in some form of public use, including open space. The purpose of designating such land as a P District on the Zoning Map is to relate the Zoning Map to actual land use and to the Master Plan with respect to such land. Any lot in a P District may be occupied by a principal use listed in Section 234.1, or by a conditional use listed in Section 234.2, subject to applicable regulations of this Code including the limitations of Section 290 for OS (Open Space) Districts; provided, however, that on any lot in a P District, which lot is within ¼ mile of the nearest NC-1 or Individual Area Neighborhood Commercial District as described in Article 7 of this Code, no accessory nonpublic use shall be permitted, unless such use or feature complies with the controls which are applicable in any NC-1 or Individual Area Neighborhood Commercial District or Restricted Use Subdistrict located within ¼ mile of the lot, excluding the provisions of zoning category .83, as defined in Section 790.80 of Article 7. Per section 234.2(a) of the Planning Code, a wireless telecommunications facility is permitted as a conditional use.

7. **Location Preference.** The WTS Facilities Siting Guidelines identify different types of buildings for the siting of wireless telecommunications facilities, with Location Preference 1 being the most desirable location and Location Preference 7 being the least desirable location. Under the Guidelines, the Project is a Location Preference Number 1, as it is a preferred location for a publicly used structure (USA National Guard facility).

8. **Radio Waves Range.** According to the Project Sponsor, the proposed wireless network will transmit and receive calls by radio waves operating in the 1879– 1895 and 1959 – 1975 Megahertz (MHz) bands, which are regulated by the Federal Communications Commission (FCC) and which must comply with the FCC adopted health and safety standards for electromagnetic radiation and radio frequency radiation.

9. **Radiofrequency (RF) Emissions:** The Project Sponsor retained Hammett & Edison, Inc., a radio engineering consulting firm, to prepare a report describing the expected RF emissions from the proposed facility. The Department of Public Health reviewed the report and determined that the proposed facility complies with the standards set forth in the Guidelines. Once the installation is constructed and operational, a second report documenting the actual RF emissions will be prepared and evaluated for compliance.

10. **Department of Public Health Review and Approval.** There are currently three existing wireless telecommunications facilities located at this site. The existing RF levels for a person anywhere at the ground level of the site were less than 2% of the most restrictive public exposure limit. T-Mobile proposes to install six RFS APX16DWV-16DWV-16DWV-S-E-A20 antennas. The estimated ambient RF field from the proposed Verizon transmitters at ground level is calculated to be 0.0027 mW/square centimeter, which is .27% of the FCC public exposure limit. The ambient RF levels are therefore expected to remain below 1% of the FCC exposure limit. The three dimensional perimeter of RF levels equal to the public exposure limit is expected to extend 11 feet and does not reach any publicly accessible areas. Warning signs must be placed at the antenna in English, Spanish, and Chinese. Workers should not have access within three feet of the front of the antennas while they are in operation.

11. **Maintenance Schedule**. According to the Project Sponsor, routine maintenance of the WTS facility will occur once or twice a month to insure quality optimization. The facility's associated equipment cabinets contain 48-hr built-in battery back up for temporary emergency power in the case of extreme emergency.

12. **Community Outreach.** A Community Outreach Meeting was conducted for the proposed project. The meeting was held at 7:00 PM on Wednesday, February 17, 2010, at the Armory Facility Lower Classroom, 100 Armory Road, San Francisco, CA 94117. According to the Project Sponsor no neighbors attended the meeting.

13. **Five-year plan:** T-Mobile submitted its latest five-year plan, as required, on April, 2010.

14. **Public Comment.** The Department has not received public comment since the filing of the application as of the date of this motion.

15. **Planning Code Compliance.** The Commission finds that the Project is consistent with the relevant provisions of the amendments to Planning Code in the following manner:

    A. **Use.** A WTS facility is considered a public utility under Planning Code Section 209.6(b), which requires Conditional Use authorization in the P District under Planning Code Section 234.2(a).

    B. **Height.** Per Planning Code Section 260(b)2(I), radio antennae for transmission, reception, or relay of radio, television of other electronic signals, where permitted as principal or conditional uses are exempt from height limits.

16. **Planning Code Section 303** establishes criteria for the Planning Commission to consider when reviewing applications for Conditional Use approval. On balance, the project does comply with said criteria in that:

    A. The proposed new uses and building, at the size and intensity contemplated and at the proposed location, will provide a development that is necessary or desirable, and compatible with, the neighborhood or the community.

    The proposed project will be generally desirable and compatible with the surrounding neighborhood because the project will not conflict with the existing uses of the property and will be of such size and nature to be compatible with the public use nature the vicinity and immediate area. The approval of this authorization has been found, first and foremost, to insure public safety, and insure that the placement of antennas and related support and protection features are so located, designed, and treated architecturally to minimize their visibility from public places, to avoid intrusion into public vistas, avoid disruption of the architectural design integrity of building and insure harmony with neighborhood character. The proposed project will also provide necessary facilities for emergency transmission and improved communication for the neighborhood, community and the region.

    B. The proposed project will not be detrimental to the health, safety, convenience or general welfare of persons residing or working in the vicinity. There are no features of the project that could be detrimental to the health, safety or convenience of those residing or working the area, in that:

        i Nature of proposed site, including its size and shape, and the proposed size, shape and arrangement of structures;

        The proposed project must comply with all applicable Federal and State regulations to safeguard the health, safety and to ensure that persons residing or working in the vicinity will not be affected, and prevent harm to other personal property.

An evaluation of potential health effects from RF radiation, conducted by the Department of Public Health, has concluded that the proposed wireless transmission facilities will have no adverse health effects if operated in compliance with the FCC-adopted health and safety standards. The Department has received information that the proposed wireless system must be operated so as not to interfere with radio or television reception in order to comply with the provisions of its license under the FCC.

The Department is developing a database of all such wireless communications facilities operating or proposed for operation in the City and County of San Francisco. All applicants are now required to submit information on the location and nature of all existing and approved wireless transmission facilities operated by the Project Sponsor. The goal of this effort is to foster public information as to the location of these facilities.

ii The accessibility and traffic patterns for persons and vehicles, the type and volume of such traffic, and the adequacy of proposed off-street parking and loading;

No significant increase in traffic volume is anticipated with the establishment of the proposed WTS facility. According to the Project Sponsor the WTS facility would operate 24 hours per day, seven days per week as an unmanned facility, which will only require access by company representatives no more than twice a month for maintenance.

iii The safeguards afforded to prevent noxious or offensive emissions such as noise, glare, dust and odor;

While some noise and dust may result from the installation of the antennas and transceiver equipment, once the facility is built, impacts with regards to the above will likely be insignificant.

iv Treatment given, as appropriate, to such aspects as landscaping, screening, open spaces, parking and loading areas, service areas, lighting and signs;

The subject site has ample landscaping and open space. The installation of antennas on an existing monopole will not affect the existing landscaping.

C. That the use as proposed will comply with the applicable provisions of the Planning Code and will not adversely affect the General Plan.

The Project complies with all relevant requirements and standards of the Planning Code and is consistent with objectives and policies of the General Plan as detailed below.

17. **General Plan Compliance.** The Project is, on balance, consistent with the following Objectives and Policies of the General Plan

COMMERCE AND INDUSTRY ELEMENT

Objectives and Policies

OBJECTIVE 1:
MANAGE ECONOMIC GROWTH AND CHANGE TO ENSURE ENHANCEMENT OF THE TOTAL CITY LIVING AND WORKING ENVIRONMENT.

Policy 1:
Encourage development, which provides substantial net benefits and minimizes undesirable consequences. Discourage development, which has substantial undesirable consequences that cannot be mitigated.

Policy 2:
Assure that all commercial and industrial uses meet minimum, reasonable performance standards.

The project would enhance the total city living and working environment by providing communication services for residents and workers within the City. Additionally, the project would comply with Federal, State and Local performance standards.

OBJECTIVE 2:
MAINTAIN AND ENHANCE A SOUND AND DIVERSE ECONOMIC BASE AND FISCAL STRUCTURE FOR THE CITY.

Policy 1:
Seek to retain existing commercial and industrial activity and to attract new such activity to the city.

Policy 3:
Maintain a favorable social and cultural climate in the city in order to enhance its attractiveness as a firm location.

The site is an integral part of a wireless communications network that will enhance the City's diverse economic base.

OBJECTIVE 4:
IMPROVE THE VIABILITY OF EXISTING INDUSTRY IN THE CITY AND THE ATTRACTIVENESS OF THE CITY AS A LOCATION FOR NEW INDUSTRY.

Policy 1:
Maintain and enhance a favorable business climate in the City.

Policy 2:
Promote and attract those economic activities with potential benefit to the City.

The project would benefit the City by enhancing the business climate through improved communication services for residents and workers.

OBJECTIVE 8:
ENHANCE SAN FRANCISCO'S POSITION AS A NATIONAL CENTER FOR CONVENTIONS AND VISITOR TRADE.

Policy 8.3:
Assure that areas of particular visitor attraction are provided with adequate public services for both residents and visitors.

The Project will ensure that residents and visitors have adequate public service in the form of T-Mobile mobile telecommunications.

COMMUNITY SAFETY ELEMENT

Objectives and Policies

OBJECTIVE 3:
ENSURE THE PROTECTION OF LIFE AND PROPERTY FROM THE EFFECTS OF FIRE OR NATURAL DISASTER THROUGH ADEQUATE EMERGENCY OPERATIONS PREPARATION.

Policy 1:
Maintain a local agency for the provision of emergency services to meet the needs of San Francisco.

Policy 2:
Develop and maintain viable, up-to-date in-house emergency operations plans, with necessary equipment, for operational capability of all emergency service agencies and departments.

Policy 3:
Maintain and expand agreements for emergency assistance from other jurisdictions to ensure adequate aid in time of need.

Policy 4:
Establish and maintain an adequate Emergency Operations Center.

Policy 5:
Maintain and expand the city's fire prevention and fire-fighting capability.

Policy 6:
Establish a system of emergency access routes for both emergency operations and evacuation.

In the event that traditional land line telephones are rendered inoperable during a natural disaster the project would enhance the ability of the City to protect both life and property from the effects of a fire or natural disaster by improving wireless communication services.

18. **Planning Code Section 101.1(b)** establishes eight priority-planning policies and requires review of permits for consistency with said policies. On balance, the project does comply with said policies in that:

    A. That existing neighborhood-serving retail uses be preserved and enhanced and future opportunities for resident employment in and ownership of such businesses be enhanced.

    No neighborhood-serving retail use would be displaced and the wireless communications network will enhance personal communication services.

    B. That existing housing and neighborhood character be conserved and protected in order to preserve the cultural and economic diversity of our neighborhoods.

    No residential uses would be displaced or altered in any way by the granting of this authorization.

    C. That the City's supply of affordable housing be preserved and enhanced,

    The project would have no adverse impact on housing in the vicinity.

    D. That commuter traffic not impede MUNI transit service or overburden our streets or neighborhood parking.

    The Project will not adversely impact public transit or place a burden on the existing supply of parking in the neighborhood. According to the Project Sponsor, the proposal to add three antenna to an existing WTS facility will only require access by company representatives once a month.

    E. That a diverse economic base be maintained by protecting our industrial and service sectors from displacement due to commercial office development, and that future opportunities for resident employment and ownership in these sectors be enhanced.

    The Project would cause no displacement of industrial and service sector activity.

    F. That the City achieve the greatest possible preparedness to protect against injury and loss of life in an earthquake.

    Compliance with applicable structural safety and seismic safety requirements would be considered during the building permit application review process.

    G. That landmarks and historic buildings be preserved.

    No landmarks or historic buildings would be affected by the project.

    H. That our parks and open space and their access to sunlight and vistas be protected from development.

The Project will have no adverse impact on parks or open space, or their access to sunlight or vistas.

19. The Project is consistent with and would promote the general and specific purposes of the Code provided under Section 101.1(b) in that, as designed, the Project would contribute to the character and stability of the neighborhood and would constitute a beneficial development.

20. The Commission hereby finds that approval of the Determination of Compliance authorization would promote the health, safety and welfare of the City.

DECISION

That based upon the Record, the submissions by the Applicant, the staff of the Department and other interested parties, the oral testimony presented to this Commission at the public hearings, and all other written materials submitted by all parties, the Commission hereby **APPROVES Conditional Use Application No. 2009.1002CP** subject to the following conditions attached hereto as "EXHIBIT A" which is incorporated herein by reference as though fully set forth**.**

APPEAL AND EFFECTIVE DATE OF MOTION: Any aggrieved person may appeal this conditional use authorization to the Board of Supervisors within thirty (30) days after the date of this Motion No. XXXXX. The effective date of this Motion shall be the date of this Motion if not appealed (after the 30-day period has expired) OR the date of the decision of the Board of Supervisors if appealed to the Board of Supervisors. For further information, please contact the Board of Supervisors at (415) 554-5184, City Hall, Room 244, 1 Dr. Carlton B. Goodlett Place, San Francisco, CA 94102.

I hereby certify that the foregoing Motion was adopted by the Planning Commission on **July 1, 2010**.

_____
Linda Avery
Commission Secretary

AYES:

NAYES:

ABSENT:

ADOPTED: July 1, 2010

Exhibit A
Conditions of Approval

Whenever "Project Sponsor" is used in the following conditions, the conditions shall also bind any successor to the Project or other persons having an interest in the Project or underlying property.

GENERAL CONDITIONS

1. This authorization is for a Conditional Use Authorization under Planning Code Sections 234.2(a) and 303 to establish a new wireless telecommunications services (WTS) facility consisting of six panel antennas mounted on a 53-feet tall monopole with related equipment cabinets located at grade, as part of the T-Mobile wireless telecommunications network in a P (Public Use) Zoning District, Coastal Zone Permit Area, and a OS (Open Space) Height and Bulk District, in general conformance with plans filed with the Application dated April 22, 2010, stamped "EXHIBIT B" and are subject to the following conditions, included in the docket for Case No. 2009.1002CP, reviewed and approved by the Commission on July 1, 2010.

2. **Plan Drawings**. Prior to the issuance of any building or electrical permits for the installation of the facilities, the Project Sponsor shall submit final scaled drawings for review and approval by the Planning Department ("Plan Drawings"). The Plan Drawings shall describe:
    a. **Structure and Siting**. Identify all facility related support and protection measures to be installed. This includes, but is not limited to, the location(s) and method(s) of placement, support, protection, screening, paint and/or other treatments of the antennas and other appurtenances to insure public safety, insure compatibility with urban design, architectural and historic preservation principles, and harmony with neighborhood character.
    b. **For the Project Site, regardless of the ownership of the existing facilities**. Identify the location of all existing antennas and facilities; and identify the location of all approved (but not installed) antennas and facilities.
    c. **Emissions**. Provide a report, subject to approval of the Zoning Administrator, that operation of the facilities in addition to ambient RF emission levels will not exceed adopted FCC standards with regard to human exposure in uncontrolled areas.

3. **Project Implementation Report**. The Project Sponsor shall prepare and submit to the Zoning Administrator a Project Implementation Report. The Project Implementation Report shall:
    a. Identify the three-dimensional perimeter closest to the facility at which adopted FCC standards for human exposure to RF emissions in uncontrolled areas are satisfied;
    b. Document testing that demonstrates that the facility will not cause any potential exposure to RF emissions that exceed adopted FCC emission standards for human exposure in uncontrolled areas.

c. The Project Implementation Report shall compare test results for each test point with applicable FCC standards. Testing shall be conducted in compliance with FCC regulations governing the measurement of RF emissions and shall be conducted during normal business hours on a non-holiday weekday with the subject equipment measured while operating at maximum power.

d. **Testing, Monitoring, and Preparation**. The Project Implementation Report shall be prepared by a certified professional engineer or other technical expert approved by the Department. At the sole option of the Department, the Department (or its agents) may monitor the performance of testing required for preparation of the Project Implementation Report. The cost of such monitoring shall be borne by the Project Sponsor pursuant to the condition related to the payment of the City's reasonable costs.

i. **Notification and Testing**. The Project Implementation Report shall set forth the testing and measurements undertaken pursuant to Conditions 2 and 4.

ii. **Approval**. The Zoning Administrator shall request that the Certification of Final Completion for operation of the facility not be issued by the Department of Building Inspection until such time that the Project Implementation Report is approved by the Department for compliance with these conditions.

4. **Notification prior to Project Implementation Report**. The Project Sponsor shall undertake to inform and perform appropriate tests for residents of any dwelling units located within 25 feet of the transmitting antenna at the time of testing for the Project Implementation Report.

a. At least twenty calendar days prior to conducting the testing required for preparation of the Project Implementation Report, the Project Sponsor shall mail notice to the Department, as well as to the resident of any legal dwelling unit within 25 feet of a transmitting antenna of the date on which testing will be conducted. The Applicant will submit a written affidavit attesting to this mail notice along with the mailing list.

b. When requested in advance by a resident notified of testing pursuant to subsection (a), the Project Sponsor shall conduct testing of total power density of RF emissions within the residence of that resident on the date on which the testing is conducted for the Project Implementation Report.

5. **Community Liaison**. Within 10 days of the effective date of this authorization, the Project Sponsor shall appoint a community liaison officer to resolve issues of concern to neighbors and residents relating to the construction and operation of the facilities. Upon appointment, the Project Sponsor shall report in writing the name, address and telephone number of this officer to the Zoning Administrator. The Community Liaison Officer shall report to the Zoning Administrator what issues, if any, are of concern to the community and what issues have not been resolved by the Project Sponsor.

6. **Installation**. Within 10 days of the installation and operation of the facilities, the Project Sponsor shall confirm in writing to the Zoning Administrator that the facilities are being maintained and operated in compliance with applicable Building, Electrical and other Code requirements, as well as applicable FCC emissions standards.

7. **Screening**.

a. To the extent necessary to ensure compliance with adopted FCC regulations regarding human exposure to RF emissions, and upon the recommendation of the Zoning Administrator, the Project Sponsor shall:
   i. Modify the placement of the facilities;
   ii. Install fencing, barriers or other appropriate structures or devices to restrict access to the facilities;
   iii. Install multi-lingual signage, including the RF radiation hazard warning symbol identified in ANSI C95.2-1982, to notify persons that the facility could cause exposure to RF emissions; or
   iv. Implement any other practice reasonably necessary to ensure that the facility is operated in compliance with adopted FCC RF emission standards.
b. To the extent necessary to minimize visual obtrusion and clutter, installations shall conform to the following standards:
c. Antennas and back-up equipment shall be painted, fenced, landscaped or otherwise treated architecturally so as to minimize visual impacts;
d. Rooftop installations shall be setback such that back-up facilities are not viewed from the street;
e. Antennae attached to building facades shall be so placed, screened or otherwise treated to minimize any negative visual impact; and
f. Although co-location of various companies' facilities may be desirable, a maximum number of antennas and back-up facilities on the Project Site shall be established, on a case-by-case basis, such that "antennae farms" or similar visual intrusions for the site and area is not created.

8. **Out of Service**. The Project Sponsor or Property Owner shall remove antennae and equipment that has been out of service for a continuous period of six months or otherwise abandoned.

9. **Periodic Safety Monitoring**. The Project Sponsor shall submit to the Zoning Administrator 10 days after installation of the facilities, and every two years thereafter, a certification attested to by a licensed engineer expert in the field of EMR/RF emissions, that the facilities are and have been operated within the then current applicable FCC standards for RF/EMF emissions.

10. **Emissions Conditions**. It is a continuing condition of this authorization that the facilities be operated in such a manner so as not to contribute to ambient RF/EMF emissions in excess of then current FCC adopted RF/EMF emission standards; violation of this condition shall be grounds for revocation.

11. **Noise and Heat.** The WTS facility, including power source and cooling facility, shall be operated at all times within the limits of the San Francisco Noise Ordinance. The WTS facility, including power source and any heating/cooling facility, shall not be operated so as to cause the generation of heat that adversely affects a building occupant.

12. **Implementation and Monitoring Costs**.
    a. The Project Sponsor, on an equitable basis with other WTS providers, shall pay the cost of preparing and adopting appropriate General Plan policies related to the placement of

WTS facilities. Should future legislation be enacted to provide for cost recovery for planning, the Project Sponsor shall be bound by such legislation.

b. The Project Sponsor or its successors shall be responsible for the payment of all reasonable costs associated with the monitoring of the conditions of approval contained in this authorization, including costs incurred by this Department, the Department of Public Health, the Department of Electricity and Telecommunications, Office of the City Attorney, or any other appropriate City Department or agency pursuant to Planning Code Section 351(f)(2). The Planning Department shall collect such costs on behalf of the City.

c. The Project Sponsor shall be responsible for the payment of all fees associated with the installation of the subject facility, which are assessed by the City pursuant to all applicable law.

13. **All Conditions Basis for Revocation**. The Project Sponsor or its successors shall comply fully with all conditions specified in this authorization. Failure to comply with any condition shall constitute grounds for revocation under the provisions of Planning Code sections 174, 176 and 803(d). The Zoning Administrator shall schedule a public hearing before the Planning Commission to receive testimony and other evidence to demonstrate a finding of a violation of a condition of the authorization of the use of the facility and, finding that violation, the Commission shall revoke the Conditional Use authorization. Such revocation by the Planning Commission is appealable to the Board of Supervisors.

14. In the event that the project implementation report includes a finding that RF emissions for the site exceed FCC Standards in any uncontrolled location, the Zoning Administrator may require the Applicant to immediately cease and desist operation of the facility until such time that the violation is corrected to the satisfaction of the Zoning Administrator.

15. **Complaints and Proceedings**. Should any party complain to the Project Sponsor about the installation or operation of the facilities, which complaints are not resolved by the Project Sponsor, the Project Sponsor (or its appointed agent) shall advise the Zoning Administrator of the complaint and the failure to satisfactorily resolve such complaint. If the Zoning Administrator thereafter finds a violation of any provision of the City Planning Code and/or any condition of approval herein, the Zoning Administrator shall attempt to resolve such violation on an expedited basis with the Project Sponsor. If such efforts fail, the Zoning Administrator shall refer such complains to the Commission for consideration at the next regularly scheduled public meeting.

16. **Severability**. If any clause, sentence, section or any part of these conditions of approval is for any reason held to be invalid, such invalidity shall not affect or impair other of the remaining provisions, clauses, sentences, or sections of these conditions. It is hereby declared to be the intent of the Commission that these conditions of approval would have been adopted had such invalid sentence, clause, or section or part thereof not been included herein.

17. **Transfer of Operation**. Any carrier/provider authorized by the Zoning Administrator or by the Planning Commission to operate a specific WTS installation may assign the operation of the

facility to another carrier licensed by the FCC for that radio frequency provided that such transfer is made known to the Zoning Administrator in advance of such operation, and all conditions of approval for the subject installation are carried out by the new carrier/provider.

18. **Compatibility with City Emergency Services**. The facility shall not be operated, nor caused to transmit on or adjacent to any radio frequencies licensed to the City for emergency telecommunication services such that the City's emergency telecommunications system experiences interference, unless prior approval for such has been granted in writing by the City.

19. **Notice of Recordation**. Prior to the issuance of any building permit for the construction of the Project, the Zoning Administrator shall approve and order the recordation of a notice in the Official Records of the Recorder of the City and County of San Francisco, which notice shall state that construction of the Project has been authorized by and is subject to the conditions of this Motion. From time to time after the recordation of such notice, at the request of the Project Sponsor, the Zoning Administrator shall affirm in writing the extent to which the conditions of this Motion have been satisfied, and record said writing if requested.

20. Violation of the conditions contained in this Motion or of any other provisions of the Planning Code may be subject to abatement procedures and fines up to $500 a day in accordance with Planning Code Section 176.

21. Should monitoring of the Conditions of Approval contained in Exhibit A of this Motion be required, the Project Sponsor or successors shall pay fees as established in Planning Code Section 351(e)(1).

22. The authorization and right vested by virtue of this action shall be deemed void and canceled if, within 3 years of the date of this Motion, a site permit or building permit for the Project has not been secured by Project Sponsor. This authorization may be extended at the discretion of the Zoning Administrator only if the failure to issue a permit by the Department of Building Inspection is delayed by a city, state, or federal agency or by appeal of the issuance of such permit.

ACP:G:\DOCUMENTS\CU\100 Armory Drive - 2009.1002C\100 Armory Drive - 2009.1002CP Motion.DOC

Subject to: (Select only if applicable)

☐ Inclusionary Housing (Sec. 315)
☐ Jobs Housing Linkage Program (Sec. 313)
☐ Downtown Park Fee (Sec. 139)
☐ First Source Hiring (Admin. Code)
☐ Child Care Requirement (Sec. 314)
☐ Other

1650 Mission St.
Suite 400
San Francisco,
CA 94103-2479

Reception:
415.558.6378

Fax:
415.558.6409

Planning
Information:
415.558.6377

Planning Commission Motion

HEARING DATE: JULY 1, 2010

Date:	June 24, 2010
Case No.:	**2009.1002CP**
Project Address:	**100 Armory Drive**
Current Zoning:	P (Public Use) District OS (Open Space) Height and Bulk District
Block/Lot:	7281/004
Project Sponsor:	Tom Swarner on the behalf of T-Mobile 2000 2615 Camino Lenada Oakland, CA 94611
Staff Contact:	Adrian C. Putra – (415) 575-9079 adrian.putra@sfgov.org

ADOPTING FINDINGS RELATING TO APPROVAL OF A COASTAL ZONE PERMIT PURSUANT TO PLANNING CODE SECTION 330.1 TO ESTABLISH A NEW WIRELESS TELECOMMUNICATIONS SERVICES (WTS) FACILTY CONSISTING SIX PANEL ANTENNAS MOUNTED ON A 53-FEET TALL MONOPOLE WITH RELATED EQUIPMENT CABINETS LOCATED AT GRADE, AS PART OF THE T-MOBILE TELECOMMUNICATIONS NETWORK. THE PROJECT SITE IS LOCATED WITHIN THE LOCAL COASTAL ZONE AND IN A P (PUBLIC USE) ZONING DISTRICT AND A OS (OPEN SPACE) HEIGHT AND BULK DISTRICT.

PREAMBLE

On October 22, 2009, Tom Swarner on the behalf of T-Mobile (hereinafter "project sponsor"), made an application (hereinafter "application"), for Conditional Use authorization on the property at **100 Armory Drive, Lot 004 in Assessor's Block 7281**, (hereinafter "project site") to establish a new wireless telecommunications services (WTS) facility consisting of six panel antennas mounted on a 53-feet tall monopole and related equipment cabinets located at grade, as part of the T-Mobile wireless telecommunications network in a P (Public Use) Zoning District, Local Coastal Zone Permit Area, and a OS (Open Space) Height and Bulk District, in general conformity with plans filed with the Application and labeled "EXHIBIT B" (hereinafter "Project").

On April 27, 2010, Tom Swarner on the behalf of T-Mobile (hereinafter "project sponsor"), made an application (hereinafter "Application") for a Local Coastal Zone Permit on the property at **100 Armory Drive, Lot 004 in Assessor's Block 7281**, (hereinafter "project site") to establish a new wireless

telecommunications services (WTS) facility consisting of six panel antennas mounted on a 53-feet tall monopole and related equipment cabinets located at grade, as part of the T-Mobile wireless telecommunications network in a P (Public Use) Zoning District, Local Coastal Zone Permit Area, and a OS (Open Space) Height and Bulk District, in general conformity with plans filed with the Application and labeled "EXHIBIT B" (hereinafter "Project").

The San Francisco Planning Department (hereinafter "Department") determined the application to be categorically exempt from the environmental review process (CEQA) pursuant to exemption Classes 1, 3 and 11 of Title 14 of the California Administrative Code.

On July 1, 2010, the Commission conducted a duly noticed public hearing at a regularly scheduled meeting on Conditional Use Application No. 2009.1002CP.

The Commission has heard and considered the testimony presented to it at the public hearing and has further considered written materials and oral testimony presented on behalf of the applicant, Department staff, and other interested parties.

MOVED, that the Commission hereby approves the Coastal Zone Permit, **2009.1002CP**, based on the following findings:

FINDINGS

Having reviewed the materials identified in the preamble above, and having heard all testimony and arguments, this Commission finds, concludes, and determines as follows:

1. The above recitals are accurate and constitute findings of this Commission.

2. Pursuant to Section 330 of the Planning Code, the proposal requires a Coastal Zone Permit, as the site is located within the Coastal Zone. Therefore, findings of consistency with the Western Shoreline Element of the General Plan are also required.

3. **Site Description and Present Use.** The project site is located at the end of Armory Drive which is a private street located west of Skyline Boulevard between Sloat Boulevard and Great Highway, and south of the San Francisco Zoo. The project site is occupied by the National Guard and contains three buildings, and three WTS facilities (Verizon Wireless, AT&T, and Sprint-Nextel) that each have their antennas mounted onto their own individual monopole. The site is located on a heavily wooded hill above Skyline Boulevard.

4. **Surrounding Properties and Neighborhood**. There are no residential uses within a 500-foot radius of the site. Lake Merced and Harding Park Golf Course are located east of the site, the San Francisco Zoo is located north of the site, and City and State owned property is located west and south of the site. Heavily wooded open space and wide arterial streets characterize the area.

5. **Proposal.** The proposal is to establish a new Wireless Telecommunications Services (WTS) facility operated by T-Mobile and consisting of six panel antennas mounted on a 53' tall

monopole with related equipment cabinets located at grade, and within an approximately 19′-6″ by 31′ enclosed lease area. The new antennas would have a maximum height of approximately 45′-0″ above grade. Each antenna measures approximately 3′-9″ long by 1′-0″ wide by 8″ inches thick. The six proposed panel antennas to be installed by T-Mobile will be mounted to an existing monopole that contains Sprint-Nextel antennas and is located at the south property line and behind the main armory building situate at the center of the site. The Project includes a local coastal zone permit.

6. **Past History and Actions.** The Planning Commission held a duly advertised public hearing on August 15, 1996 to consider adoption of guidelines for the siting of WTS facilities in the City which would include standard conditions of approval for wireless communications facilities which are regulated by the FCC and required to meet the health and safety standards.

   The Planning Commission, by Resolution No. 14182, adopted the proposed WTS Facilities Siting Guidelines on August 15, 1996. The sample conditions of approval presented in the Guidelines form the basis for the development of conditions of approval for this Application and Motion.

   On June 13, 1996, the Commission conducted a duly noticed public hearing at a regularly scheduled meeting on the application for a Conditional Use pursuant to Planning Code Sections 234.2(a) to install a wireless transmission facility consisting of 12 antennas attached to a 40 foot tall monopole and a base transceiver station on the grounds of the California National Guard Armory at 100 Armory Drive, as part of the Cellular One (now "AT&T") telecommunications network.

   On March 20, 1997, the Commission conducted a duly noticed public hearing at a regularly scheduled meeting on the application for a Conditional Use pursuant to Planning Code Sections 234.2(a) to install a wireless transmission facility consisting of three (3) antennas attached on the top of a proposed 50 foot tall monopole and a base transceiver station in a fenced area at the base of the monopole on the grounds of the California National Guard Armory at 100 Armory Drive, as part of the Sprint-Nextel telecommunications network.

   On March 20, 1997, the Commission conducted a duly noticed public hearing at a regularly scheduled meeting on the application for a Conditional Use pursuant to Planning Code Sections 234.2(a) to install a wireless transmission facility consisting of three (3) antennas attached on the top of a proposed 50 foot tall monopole and a base transceiver station in a fenced area at the base of the monopole on the grounds of the California National Guard Armory at 100 Armory Drive, as part of the Sprint-Nextel telecommunications network.

7. **P (Public Use) Districts – Conditional Use Required.** In addition to the use districts otherwise established by this Code, there shall also be in the City a Public Use District herein referred to as a "P District," to apply to land that is owned by a governmental agency and in some form of public use, including open space. The purpose of designating such land as a P District on the Zoning Map is to relate the Zoning Map to actual land use and to the Master Plan with respect to such land. Any lot in a P District may be occupied by a principal use listed in Section 234.1, or by a conditional use listed in Section 234.2, subject to applicable regulations of this Code including

the limitations of Section 290 for OS (Open Space) Districts; provided, however, that on any lot in a P District, which lot is within ¼ mile of the nearest NC-1 or Individual Area Neighborhood Commercial District as described in Article 7 of this Code, no accessory nonpublic use shall be permitted, unless such use or feature complies with the controls which are applicable in any NC-1 or Individual Area Neighborhood Commercial District or Restricted Use Subdistrict located within ¼ mile of the lot, excluding the provisions of zoning category .83, as defined in Section 790.80 of Article 7. Per section 234.2(a) of the Planning Code, a wireless telecommunications facility is permitted as a conditional use.

8. **Coastal Zone Permit.** The project requires a Coastal Zone Permit pursuant to Planning Code Section 330 because the site is within San Francisco's Coastal Zone. Therefore, findings of consistency with the Western Shoreline Element of the General Plan are required.

9. **Location Preference.** The WTS Facilities Siting Guidelines identify different types of buildings for the siting of wireless telecommunications facilities, with Location Preference 1 being the most desirable location and Location Preference 7 being the least desirable location. Under the Guidelines, the Project is a Location Preference Number 1, as it is a preferred location for a publicly used structure (USA National Guard facility).

10. **Radio Waves Range.** According to the Project Sponsor, the proposed wireless network will transmit and receive calls by radio waves operating in the 1879– 1895 and 1959 – 1975 Megahertz (MHz) bands, which are regulated by the Federal Communications Commission (FCC) and which must comply with the FCC adopted health and safety standards for electromagnetic radiation and radio frequency radiation.

11. **Radiofrequency (RF) Emissions:** The Project Sponsor retained Hammett & Edison, Inc., a radio engineering consulting firm, to prepare a report describing the expected RF emissions from the proposed facility. The Department of Public Health reviewed the report and determined that the proposed facility complies with the standards set forth in the Guidelines. Once the installation is constructed and operational, a second report documenting the actual RF emissions will be prepared and evaluated for compliance.

12. **Department of Public Health Review and Approval.** There are currently three existing wireless telecommunications facilities located at this site. The existing RF levels for a person anywhere at the ground level of the site were less than 2% of the most restrictive public exposure limit. T-Mobile proposes to install six RFS APX16DWV-16DWV-16DWV-S-E-A20 antennas. The estimated ambient RF field from the proposed Verizon transmitters at ground level is calculated to be 0.0027 mW/square centimeter, which is .27% of the FCC public exposure limit. The ambient RF levels are therefore expected to remain below 1% of the FCC exposure limit. The three dimensional perimeter of RF levels equal to the public exposure limit is expected to extend 11 feet and does not reach any publicly accessible areas. Warning signs must be placed at the antenna in English, Spanish, and Chinese. Workers should not have access within three feet of the front of the antennas while they are in operation.

13. **Maintenance Schedule**. According to the Project Sponsor, routine maintenance of the WTS facility will occur once or twice a month to insure quality optimization. The facility's associated equipment cabinets contain 48-hr built-in battery back up for temporary emergency power in the case of extreme emergency.

14. **Community Outreach.** A Community Outreach Meeting was conducted for the proposed project. The meeting was held at 7:00 PM on Wednesday, February 17, 2010, at the Armory Facility Lower Classroom, 100 Armory Road, San Francisco, CA 94117. According to the Project Sponsor no neighbors attended the meeting.

15. **Five-year plan:** T-Mobile submitted its latest five-year plan, as required, on April, 2010.

16. **Public Comment.** The Department has not received public comment since the filing of the application as of the date of this motion.

17. **Planning Code Compliance.** The Commission finds that the Project is consistent with the relevant provisions of the amendments to Planning Code in the following manner:

    A. **Use.** A WTS facility is considered a public utility under Planning Code Section 209.6(b), which requires Conditional Use authorization in the P District under Planning Code Section 234.2(a).

    B. **Height.** Per Planning Code Section 260(b)2(I), radio antennae for transmission, reception, or relay of radio, television of other electronic signals, where permitted as principal or conditional uses are exempt from height limits.

18. **Planning Code Section 303** establishes criteria for the Planning Commission to consider when reviewing applications for Conditional Use approval. On balance, the project does comply with said criteria in that:

    A. The proposed new uses and building, at the size and intensity contemplated and at the proposed location, will provide a development that is necessary or desirable, and compatible with, the neighborhood or the community.

    The proposed project will be generally desirable and compatible with the surrounding neighborhood because the project will not conflict with the existing uses of the property and will be of such size and nature to be compatible with the public use nature the vicinity and immediate area. The approval of this authorization has been found, first and foremost, to insure public safety, and insure that the placement of antennas and related support and protection features are so located, designed, and treated architecturally to minimize their visibility from public places, to avoid intrusion into public vistas, avoid disruption of the architectural design integrity of building and insure harmony with neighborhood character. The proposed project will also provide necessary facilities for emergency transmission and improved communication for the neighborhood, community and the region.

B. The proposed project will not be detrimental to the health, safety, convenience or general welfare of persons residing or working in the vicinity. There are no features of the project that could be detrimental to the health, safety or convenience of those residing or working the area, in that:

i Nature of proposed site, including its size and shape, and the proposed size, shape and arrangement of structures;

The proposed project must comply with all applicable Federal and State regulations to safeguard the health, safety and to ensure that persons residing or working in the vicinity will not be affected, and prevent harm to other personal property.

An evaluation of potential health effects from RF radiation, conducted by the Department of Public Health, has concluded that the proposed wireless transmission facilities will have no adverse health effects if operated in compliance with the FCC-adopted health and safety standards. The Department has received information that the proposed wireless system must be operated so as not to interfere with radio or television reception in order to comply with the provisions of its license under the FCC.

The Department is developing a database of all such wireless communications facilities operating or proposed for operation in the City and County of San Francisco. All applicants are now required to submit information on the location and nature of all existing and approved wireless transmission facilities operated by the Project Sponsor. The goal of this effort is to foster public information as to the location of these facilities.

ii The accessibility and traffic patterns for persons and vehicles, the type and volume of such traffic, and the adequacy of proposed off-street parking and loading;

No significant increase in traffic volume is anticipated with the establishment of the proposed WTS facility. According to the Project Sponsor the WTS facility would operate 24 hours per day, seven days per week as an unmanned facility, which will only require access by company representatives no more than twice a month for maintenance.

iii The safeguards afforded to prevent noxious or offensive emissions such as noise, glare, dust and odor;

While some noise and dust may result from the installation of the antennas and transceiver equipment, once the facility is built, impacts with regards to the above will likely be insignificant.

iv Treatment given, as appropriate, to such aspects as landscaping, screening, open spaces, parking and loading areas, service areas, lighting and signs;

The subject site has ample landscaping and open space. The installation of antennas on an existing monopole will not affect the existing landscaping.

C. That the use as proposed will comply with the applicable provisions of the Planning Code and will not adversely affect the General Plan.

The Project complies with all relevant requirements and standards of the Planning Code and is consistent with objectives and policies of the General Plan as detailed below.

19. **General Plan Compliance.** The Project is, on balance, consistent with the following Objectives and Policies of the General Plan

WESTERN SHORELINE AREA PLAN

The Zoo

Objectives and Policies

OBJECTIVE 4:
IMPROVE THE QUALITY OF THE ZOO AND ITS RELATIONSHIP TO THE COASTAL ZONE RECREATIONAL SYSTEM.

Policy 1:
Maintain the landscaped park-like atmosphere of the Zoo.

The project site which is located south of the San Francisco Zoo does not involve any significant physical modifications that adversely impact the landscaped park-like atmosphere of the Zoo.

20. **Planning Code Section 101.1(b)** establishes eight priority-planning policies and requires review of permits for consistency with said policies. On balance, the project does comply with said policies in that:

A. That existing neighborhood-serving retail uses be preserved and enhanced and future opportunities for resident employment in and ownership of such businesses be enhanced.

No neighborhood-serving retail use would be displaced and the wireless communications network will enhance personal communication services.

B. That existing housing and neighborhood character be conserved and protected in order to preserve the cultural and economic diversity of our neighborhoods.

No residential uses would be displaced or altered in any way by the granting of this authorization.

C. That the City's supply of affordable housing be preserved and enhanced,

The project would have no adverse impact on housing in the vicinity.

D. That commuter traffic not impede MUNI transit service or overburden our streets or neighborhood parking.

The Project will not adversely impact public transit or place a burden on the existing supply of parking in the neighborhood. According to the Project Sponsor, the proposal to add three antenna to an existing WTS facility will only require access by company representatives once a month.

E. That a diverse economic base be maintained by protecting our industrial and service sectors from displacement due to commercial office development, and that future opportunities for resident employment and ownership in these sectors be enhanced.

The Project would cause no displacement of industrial and service sector activity.

F. That the City achieve the greatest possible preparedness to protect against injury and loss of life in an earthquake.

Compliance with applicable structural safety and seismic safety requirements would be considered during the building permit application review process.

G. That landmarks and historic buildings be preserved.

No landmarks or historic buildings would be affected by the project.

H. That our parks and open space and their access to sunlight and vistas be protected from development.

The Project will have no adverse impact on parks or open space, or their access to sunlight or vistas.

21. The Project is consistent with and would promote the general and specific purposes of the Code provided under Section 101.1(b) in that, as designed, the Project would contribute to the character and stability of the neighborhood and would constitute a beneficial development.

22. The Commission hereby finds that approval of the Determination of Compliance authorization would promote the health, safety and welfare of the City.

DECISION

That based upon the Record, the submissions by the Applicant, the staff of the Department and other interested parties, the oral testimony presented to this Commission at the public hearings, and all other written materials submitted by all parties, the Commission hereby **APPROVES Coastal Zone Permit No. 2009.1002CP.**

APPEAL AND EFFECTIVE DATE OF MOTION: Any aggrieved person may appeal this Coastal Zone Permit to the Board of Permit Appeals per Planning Code Section 330.9 within ten (10) days of the date of this Motion No. XXXXX. The effective date of this Motion shall be the date of this Motion if not appealed. For further information, please contact the Board of Permit Appeals in person at 1650 Mission Street, 3rd Floor (Room 304) or call (415) 575 – 6880.

I hereby certify that the foregoing Motion was adopted by the Planning Commission on **July 1, 2010**.

Linda Avery
Commission Secretary

AYES:

NAYES:

ABSENT:

ADOPTED: July 1, 2010

ACP:G:\DOCUMENTS\CU\100 Armory Drive - 2009.1002C\100 Armory Drive - 2009.1002CP Coastal Motion.DOC

Parcel Map

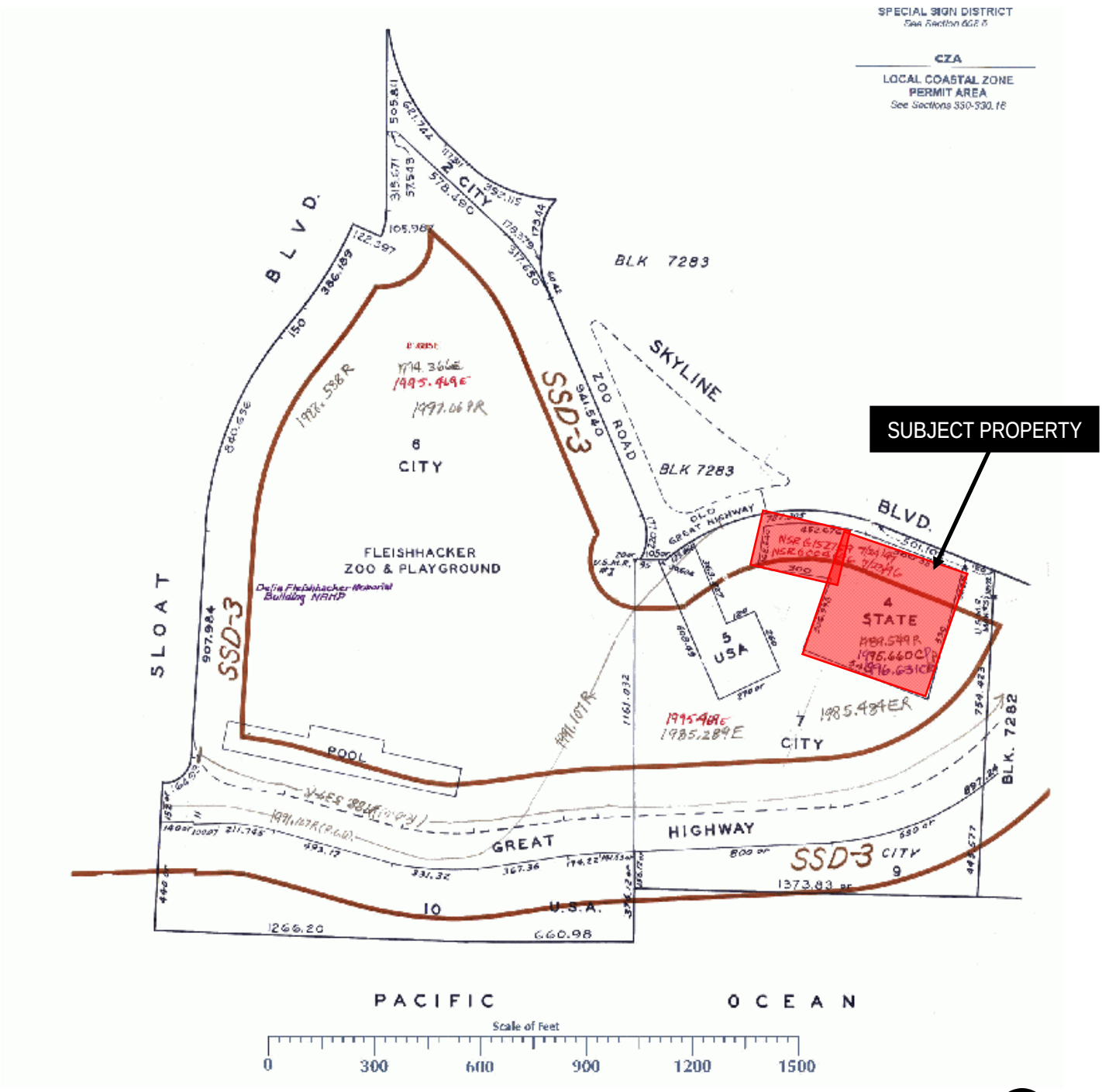

Conditional Use Request Hearing
Case Number 2009.1002CP
Wireless Telecommunications Facility
100 Armory Drive

SAN FRANCISCO
PLANNING DEPARTMENT

Aerial Photo

view looking West

Conditional Use Request Hearing
Case Number 2009.1002CP
Wireless Telecommunications Facility
100 Armory Drive

SAN FRANCISCO
PLANNING DEPARTMENT

Aerial Photo

view looking South

SUBJECT PROPERTY

Conditional Use Request Hearing
Case Number 2009.1002CP
Wireless Telecommunications Facility
100 Armory Drive

SAN FRANCISCO
PLANNING DEPARTMENT

Zoning Map

Conditional Use Request Hearing
Case Number 2009.1002CP
Wireless Telecommunications Facility
100 Armory Drive

SAN FRANCISCO
PLANNING DEPARTMENT

Zoning Map

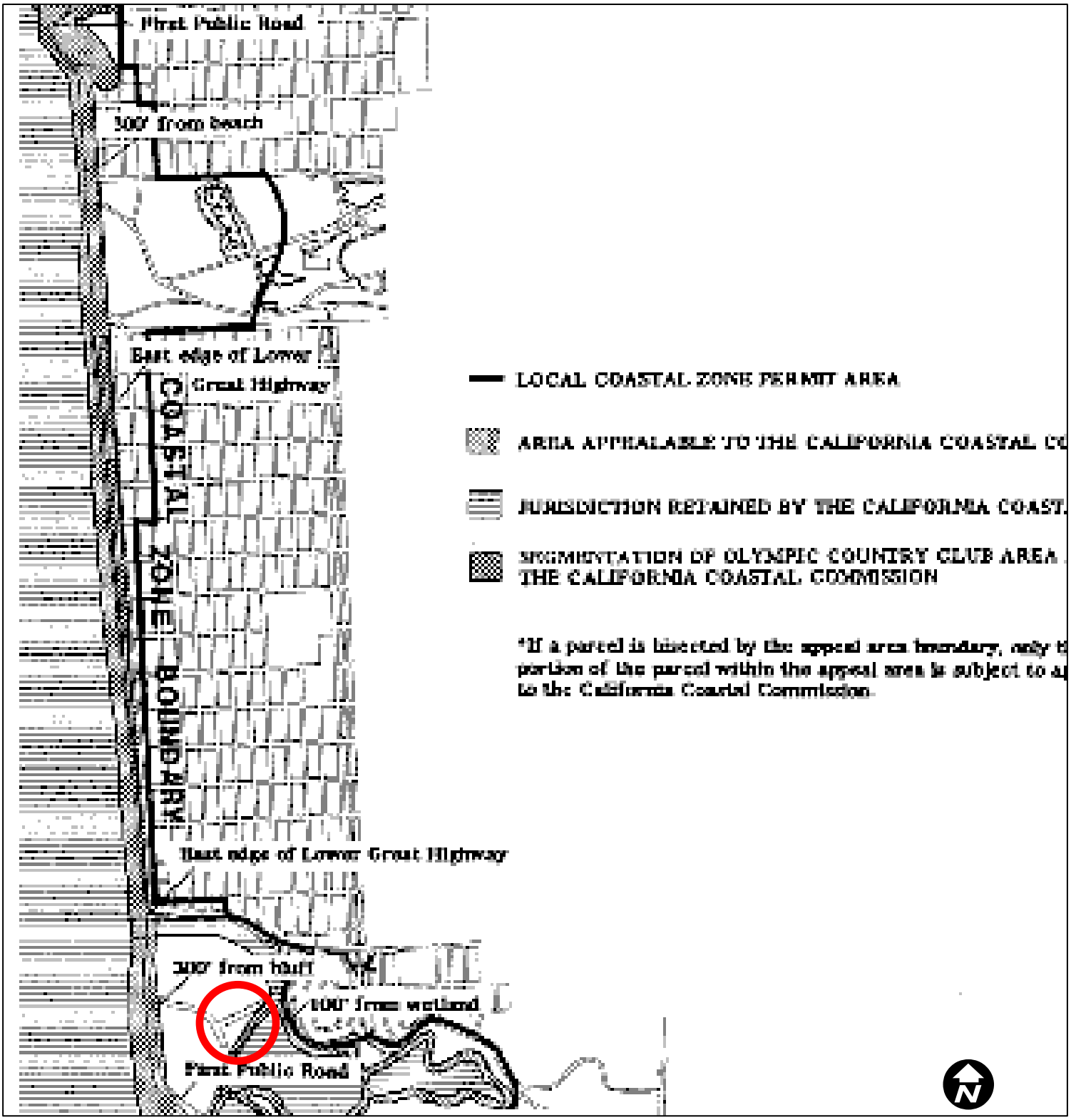

Conditional Use Request Hearing
Case Number 2009.1002CP
Wireless Telecommunications Facility
100 Armory Drive

Site Photo

ENTRANCE TO SUBJECT PROPERTY

Conditional Use Request Hearing
Case Number 2009.1002CP
Wireless Telecommunications Facility
100 Armory Drive

City and County of San Francisco
DEPARTMENT OF PUBLIC HEALTH
ENVIRONMENTAL HEALTH SECTION

Gavin Newsom, Mayor
Mitchell H. Katz, MD, Director of Health
Rajiv Bhatia, MD, MPH, Director of EH

Review of Cellular Antenna Site Proposals

Project Sponsor: *T-Mobile* **Planner**: *Jonas Ionin*

RF Engineer Consultant: *Bill Hammett, Hammett & Edison* **Phone number** *707-996-5200*

Project Address/Location: *100 Armory Rd.. (#SF23283D)*
The following information is required to be provided before approval of this project can be made. These information requirements are established in the San Francisco Planning Department Wireless Telecommunications Services Facility Siting Guidelines dated August 1996.
In order to facilitate quicker approval of this project, it is recommended that the project sponsor review this document before submitting the proposal to ensure that all requirements are included.

_X_ 1. The location of all existing antennas and facilities. Existing RF levels. (WTS-FSG, Section 11, 2b)

_X_ 2. The location of all approved (but not installed) antennas and facilities. Expected RF levels from the approved antennas. (WTS-FSG Section 11, 2b)

_X_ 3. The number and types of WTS within 100 feet of the proposed site and provide estimates of cumulative EMR emissions at the proposed site. (WTS-FSG, Section 10.5.2)

_X_ 4. Location (and number) of the Applicant's antennas and back-up facilities per building and number and location of other telecommunication facilities on the property (WTS-FSG, Section 10.4.1a)

_X_ 5. Power rating (maximum and expected operating power) for all existing and proposed backup equipment subject to the application (WTS-FSG, Section 10.4.1c)

_X_ 6. The total number of watts per installation and the total number of watts for all installations on the building (roof or side) (WTS-FSG, Section 10.5.1).

_X_ 7. Preferred method of attachment of proposed antenna (roof, wall mounted, monopole) with plot or roof plan. Show directionality of antennas. Indicate height above roof level. Discuss nearby inhabited buildings (particularly in direction of antennas) (WTS-FSG, Section 10.41d)

_X_ 8. Report estimated ambient radio frequency fields for the proposed site (identify the three-dimensional perimeter where the FCC standards are exceeded.) (WTS-FSG, Section 10.5) State FCC standard utilized and power density exposure level (i.e. 1986 NCRP, 200 $\mu w/cm^2$)

_X_ 9. Signage at the facility identifying all WTS equipment and safety precautions for people nearing the equipment as may be required by any applicable FCC-adopted standards. (WTS-FSG, Section 10.9.2). Discuss signage for those who speak languages other than English.

_X_ 10. Statement on who produced this report and qualifications.

_X_ **Approved**. Based on the information provided the following staff believes that the project proposal will comply with the current Federal Communication Commission safety standards for radiofrequency radiation exposure. FCC standard _*1986 - NCRP*_____ **Approval of the subsequent Project Implementation Report is based on project sponsor completing recommendations by project consultant and DPH.**

Comments: *There are currently three existing wireless telecommunications facilities located at this site. Existing RF levels for a person anywhere at ground level were less then 2% of the most restrictive public exposure limit. T-Mobile proposes to install six RFS Model APX16DWV-16DWV-16DWV-S-E-A20 antennas. The antennas would be mounted approximately 42 feet above ground level. The estimated ambient RF field from the proposed T-Mobile transmitters at ground level is calculated to be 0.0027 mW/sq. cm².*, which is .27% of the FCC public exposure limit. The ambient RF levels are therefore expected to remain below 1% of the public limit. The three-dimensional perimeter of RF levels equal to the public exposure limit is expected to extend 11 feet and does not reach any publicly accessible areas. Warning signs must be placed at the antenna in English, Spanish and Chinese. Worker should not have access within 3 feet of the front of the antennas while they are in operation.*

___ **Not Approved**, additional information required. _____

___ **Not Approved**, does not comply with Federal Communication Commission safety standards for radiofrequency radiation exposure. FCC Standard

__*1*__Hours spent reviewing

__*$178.00*_Charges to Project Sponsor (in addition to previous charges, to be received at time of receipt by Sponsor)

Signed _____ Date *March 22, 2010*

Patrick Fosdahl
Environmental Health Management Section
San Francisco Dept. of Public Health
1390 Market St., Suite 210,
San Francisco, CA. 94102
415-252-3904

T-Mobile West Corp. • Proposed Base Station (Site No. SF23283D)
100 Armory Road • San Francisco, California

Statement of Hammett & Edison, Inc., Consulting Engineers

The firm of Hammett & Edison, Inc., Consulting Engineers, has been retained on behalf of T-Mobile West Corp., a personal wireless telecommunications carrier, to evaluate the base station (Site No. SF23283D) proposed to be located at 100 Armory Road in San Francisco, California, for compliance with appropriate guidelines limiting human exposure to radio frequency ("RF") electromagnetic fields.

Background

The San Francisco Department of Public Health has adopted a 10-point checklist for determining compliance of WTS facilities with prevailing safety standards. The acceptable limits set by the FCC for exposures of unlimited duration are:

Personal Wireless Service	Approx. Frequency	Occupational Limit	Public Limit
Broadband Radio ("BRS")	2,600 MHz	5.00 mW/cm^2	1.00 mW/cm^2
Advanced Wireless ("AWS")	2,100	5.00	1.00
Personal Communication ("PCS")	1,950	5.00	1.00
Cellular Telephone	870	2.90	0.58
Specialized Mobile Radio ("SMR")	855	2.85	0.57
Long Term Evolution ("LTE")	700	2.33	0.47
[most restrictive frequency range]	30–300	1.00	0.20

The site was visited the undersigned engineer on August 18, 2009, and reference has been made to drawings by Delta Groups Engineering, Inc., dated October 12, 2009, and to additional information provided by T-Mobile.

Checklist

1. *The location of all existing antennas and facilities at site. Existing RF levels.*

There were observed three poles at the site, supporting separate antenna installations for Verizon Wireless, AT&T Mobility, and Sprint Nextel. Existing RF levels observed for a person anywhere at ground near the site were less than 2% of the most restrictive public exposure limit.

2. *The location of all approved (but not installed) antennas and facilities. Expected RF levels from approved antennas.*

No other WTS facilities or other communications facilities are reported to be approved for this site but not yet installed.

3. The number and types of WTS within 100 feet of proposed site and estimates of additive EMR emissions at proposed site.

There were no other WTS facilities observed within 100 feet of the site.

4. *Location (and number) of Applicant's antennas and back-up facilities per building and location (and number) of other WTS at site.*

T-Mobile proposes to mount six RFS Model APX16DWV-16DWV-S-E-A20 directional panel antennas on an existing 53 1/2-foot pole located at 100 Armory Street. The antennas would be mounted with 2° downtilt at an effective height of about 41 1/2 feet above ground and would be oriented in pairs toward 160°T. Sprint Nextel presently has similar antennas installed on the pole, mounted at about 50 feet above ground. Also installed on poles over 200 feet away are similar antennas for use by Verizon Wireless and AT&T Mobility.

5. *Power rating (maximum and expected operating power) for all existing and proposed backup equipment subject to application.*

The maximum power rating of the proposed T-Mobile transmitters is 22 watts. The actual operating power of the transmitters will depend upon the system losses encountered after the physical cabling runs have been installed; the maximum power rating of the transmitters for the other carriers is not known. The transmitters may operate at a power below their maximum rating, such that the power radiated from the antennas does not exceed the level given in Item 6 below.

6. *Total number of watts per installation and total number of watts for all installations at site.*

The maximum effective radiated power proposed by T-Mobile in any direction is 2,255 watts, representing simultaneous operation at 1,180 watts for PCS and 1,075 watts for AWS service. The maximum number of watts for the other carriers is not known.

7. *Plot or roof plan showing method of attachment of antennas, directionality of antennas, and height above roof level. Discuss nearby inhabited buildings.*

The drawings show the proposed antennas to be installed as described in Item 4 above. There were noted no residential buildings nearby.

8. *Estimated ambient RF levels for proposed site and identify three-dimensional perimeter where exposure standards are exceeded.*

For a person anywhere at ground, the maximum ambient RF exposure level due to the proposed T-Mobile operation by itself is calculated to be 0.0027 mW/cm^2, which is 0.27% of the applicable public exposure limit. The three-dimensional perimeter of RF levels equal to the public exposure limit is calculated to extend 11 feet in front of the T-Mobile antennas; this does not reach any publicly accessible areas.

9. *Describe proposed signage at site.*

Due to their mounting location, the T-Mobile antennas would not be accessible to the general public, and so no mitigation measures are necessary to comply with the FCC public exposure guidelines. To

prevent occupational exposures in excess of the FCC guidelines, no access within 3 feet directly in front of the T-Mobile antennas themselves, such as might occur during maintenance activities on the roof, should be allowed while the antennas are in operation, unless other measures can be demonstrated to ensure that occupational protection requirements are met.

10. Statement of authorship.

The undersigned author of this statement is a qualified Professional Engineer, holding California Registrations Nos. E-13026 and M-20676, which expire on June 30, 2011. This work has been carried out under his direction, and all statements are true and correct of his own knowledge except, where noted, when data has been supplied by others, which data he believes to be correct.

Conclusion

Based on the information and analysis above, it is my professional opinion that the proposed T-Mobile West Corp. base station operation at 100 Armory Road in San Francisco will comply with the prevailing standards for limiting public exposure to radio frequency energy and, therefore, will not for this reason cause a significant impact on the environment.

REGISTERED PROFESSIONAL ENGINEER
WILLIAM F. HAMMETT
E-13026
M-20676
Exp. 6-30-2011
ELECTRICAL
MECHANICAL
STATE OF CALIFORNIA

William F. Hammett, P.E.

October 19, 2009

T

CU Application Section E

Community Outreach Affidavit & Sign-in Sheet

T-Mobile Site #SF23283
SF Planning Case #2009.1002C 10/22/2009
Site Address: 100 Armory Rd., San Francisco CA 94132
APN: 7281-004
Zoning District: P

A Community Meeting for the purpose of presenting information related to a proposed antenna facility at the National Guard Armory, 100 Armory Rd., San Francisco CA, Permit Case #2009.1002C was held on 2/17/10 at the Armory Facility Lower Classroom, 100 Armory Rd., San Francisco CA. This Wireless Telecommunications Services (WTS) Facilities Siting Guidelines Conditional Use Checklist Item E requirement has been satisfied according to the rules as set forth by San Francisco Planning Commission Resolution 14182 WTS Facilities Siting Guidelines.

I, Tom Swarner, hereby certify and affirm that the foregoing information completed by me, is to the best of my knowledge true and correct.

Signed: _____ Date: 3/1/10
Applicant

Tom Swarner, Delta Groups for T-Mobile USA, Inc.
(Print Name of Applicant in Full)

COMMUNITY MEETING SIGN-IN SHEET

SF CUP CASE #2009.1002C 10/22/2009

Project: 100 Armory Road, San Francisco, CA 94132

Meeting Date: February 17, 2010

Facilitator: Tom Swarner representing T-Mobile, USA

Place/Room: 100 Armory Rd / Lower Classroom

Name	Title	Company	Phone	Fax	E-Mail
Tom SWARNER	PROJ. MGR.	DELTA GROUPS T-MOBILE	510-435 3595		tomale75 @hotmail.com
TIM SCHLAFER	ARMORY MANAGER	CA Army NG	415 6655367x4		Timothy.Schlafer @us.army.mil

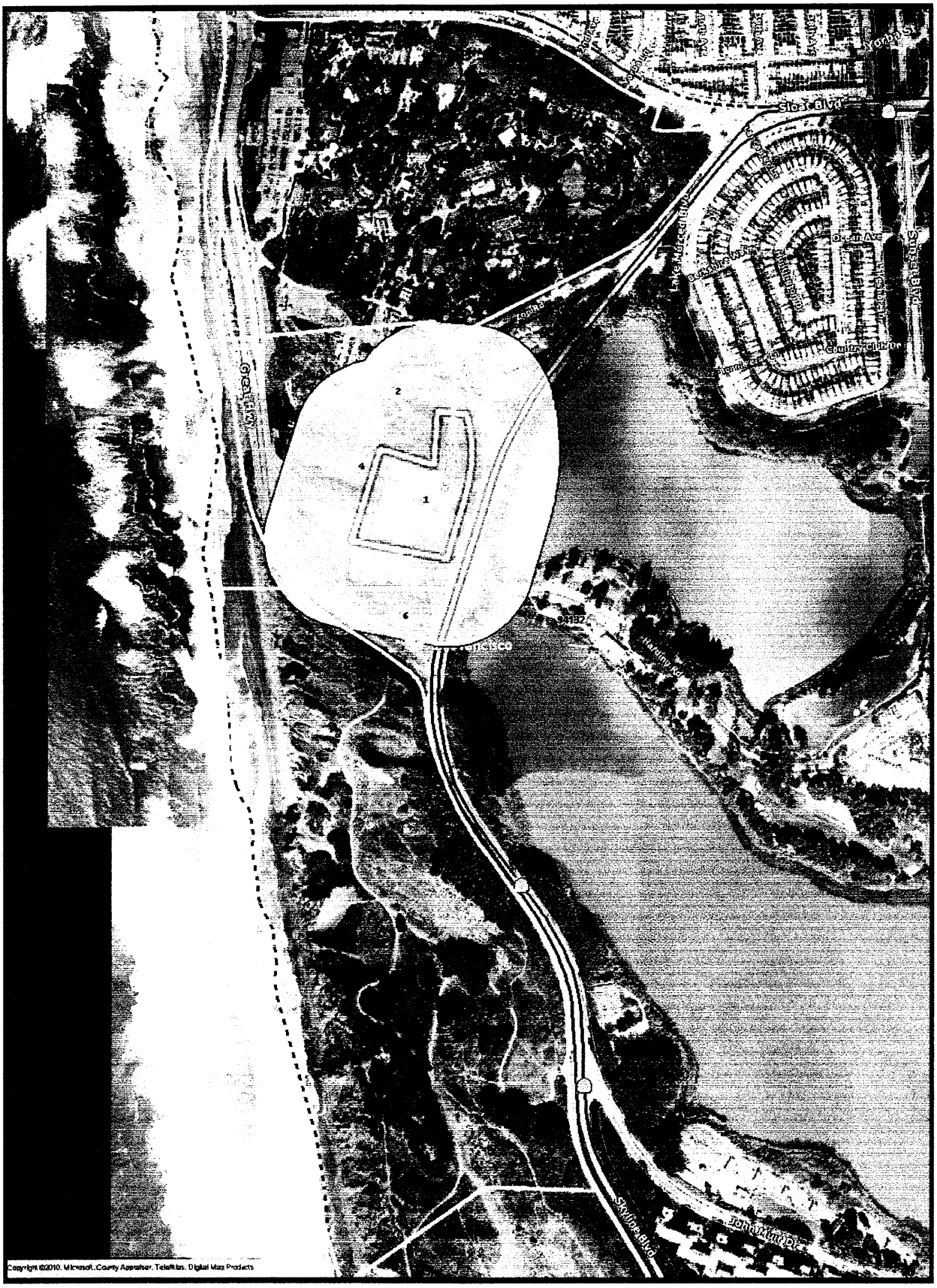

NotificationMaps.com

100 Armory

500 foot radius map

N

500 ft

LandVision

STATE PROPERTY
,

RECREATION & PARK DEPARTMENT MCLAREN LODGE
501 STANYAN ST
SAN FRANCISCO, CA 94117

RECREATION & PARK DEPARTMENT MCLAREN LODGE
501 STANYAN ST
SAN FRANCISCO, CA 94117

RECREATION & PARK DEPARTMENT MCLAREN LODGE
501 STANYAN ST
SAN FRANCISCO, CA 94117

RECREATION & PARK DEPARTMENT MCLAREN LODGE
501 STANYAN ST
SAN FRANCISCO, CA 94117

RECREATION & PARK DEPARTMENT MCLAREN LODGE
501 STANYAN ST
SAN FRANCISCO, CA 94117

UNITED STATES OF AMERICA
570 ELLIS ST
SAN FRANCISCO, CA 94109

Notice of Community Meeting

Proposed Project at Army National Guard Facility

TO: Residents and Property Owners within a 500' radius of the Army National Guard Facility, 100 Armory Rd., San Francisco CA 94132

Meeting Information

Date: February 17, 2010
Time 7:00 pm
Location: Army National Guard Main Building - First Floor Meeting Room
100 Armory Rd., San Francisco CA

Notice

Application Description:
City of San Francisco Conditional Use Permit - Co-located Unmanned Wireless Communication Facility.

Project Description:
T-Mobile proposes to install four (4) radio cabinets and six (6) flat panel antennas. The antennas are cross-arm mounted to the existing Sprint PCS steel monopole tower located at the south property line behind the main armory building. Radio cabinets are located on the ground level at the base of the existing monopole. This installation will enhance emergency and personal communication services, respond to higher demand, maximize quality and increase service dependability in this area of the city.

Project Information

Address: 100 Armory Rd., San Francisco CA 94132
APN: 7281-005
Zoning: P (Public Use)

Applicant

T-Mobile USA
1855 Gateway Blvd., Concord CA 94520

Project Contact Information

Tom Swarner – Land Use/Zoning Consultant
Delta Groups
(510) 435-3595

Architectural plans and photo-simulations will be available for your review at the meeting.

If you are unable to attend this meeting, please contact **Tom Swarner at (510) 435-3595** with any questions. If you have questions for the San Francisco Planning Department, please contact Case Planner Adrian Putra at 415-575-9079.

NOTE: If you require an interpreter to be present at this meeting, please make your request by calling (510) 435-3595 at your earliest convenience.

Existing

Proposed

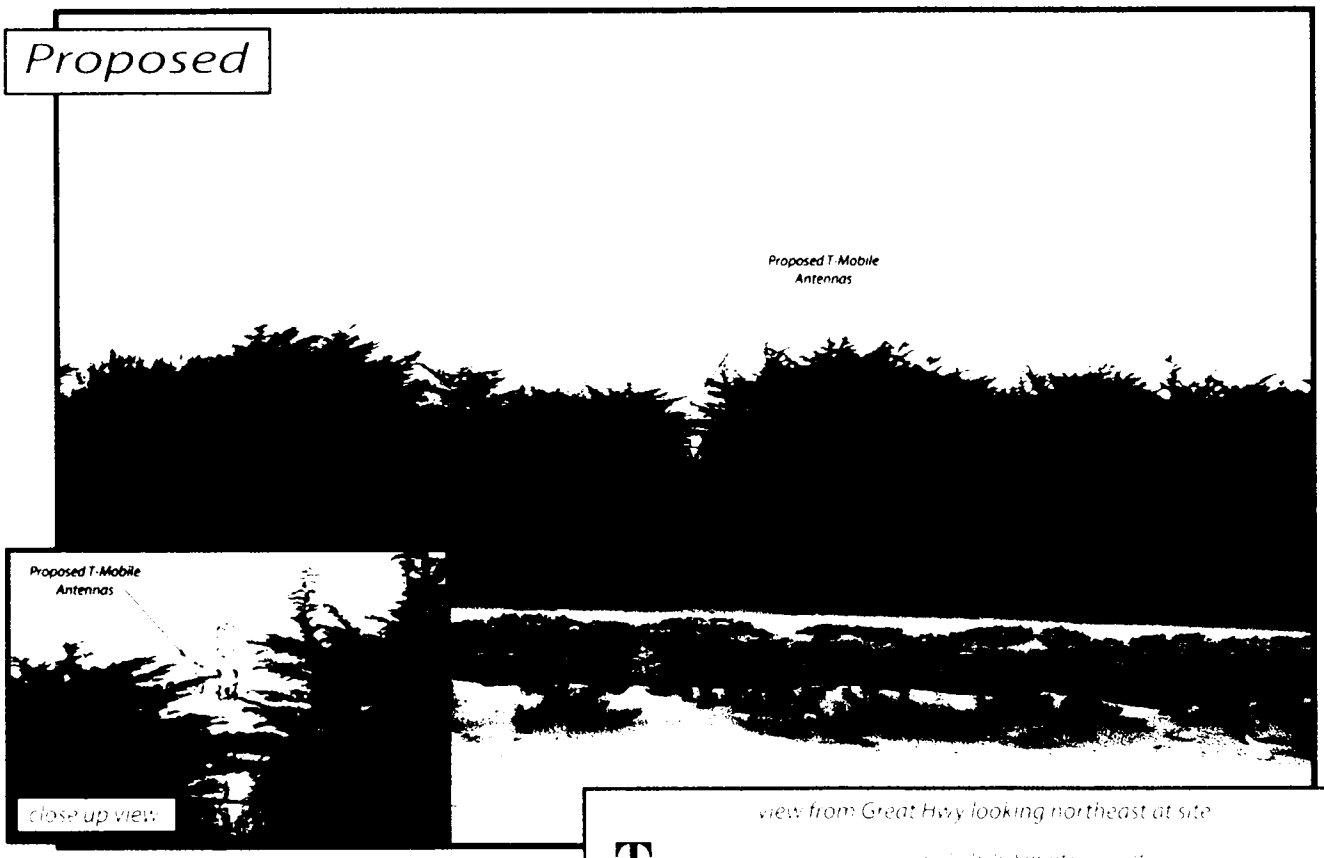

view from Great Hwy looking northeast at site

T

Existing

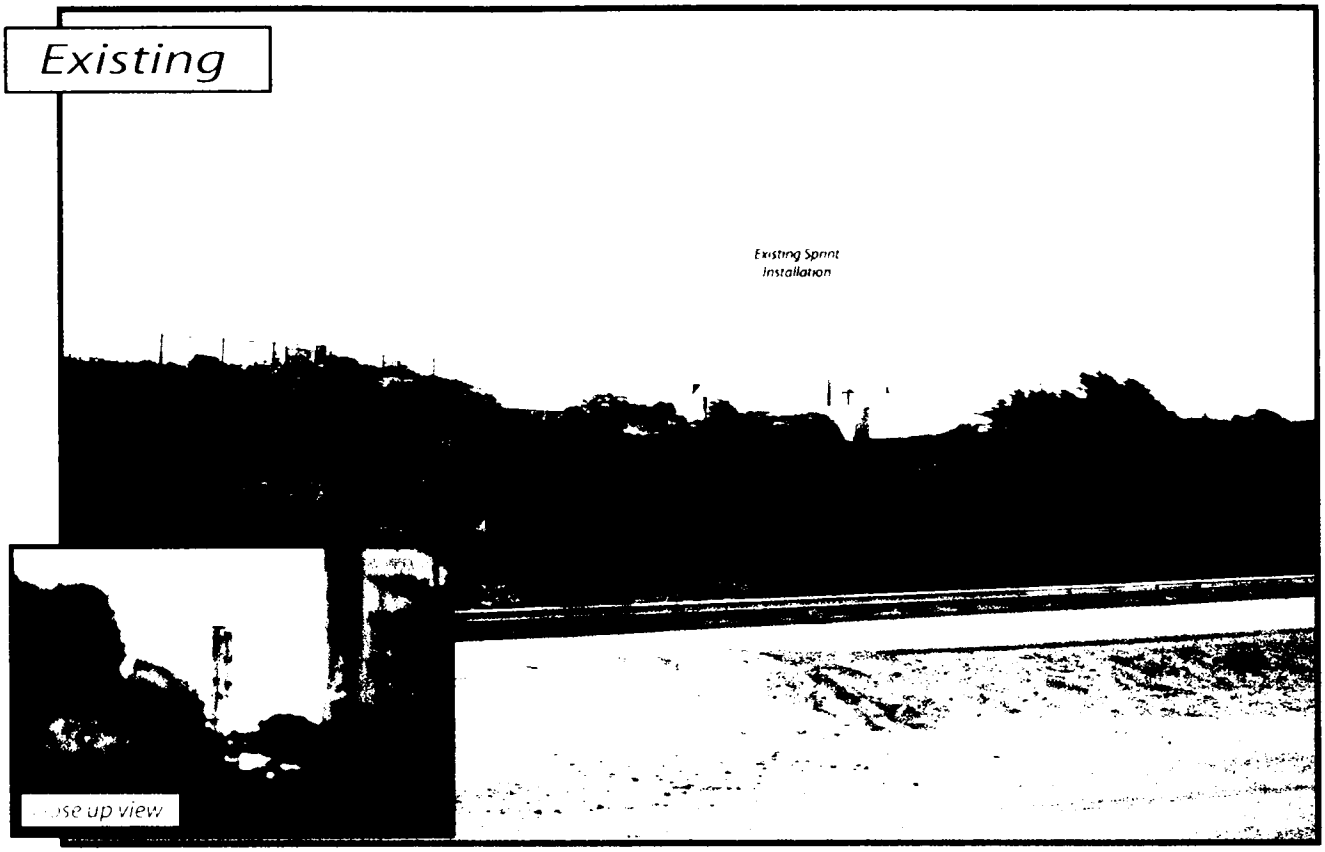

Proposed

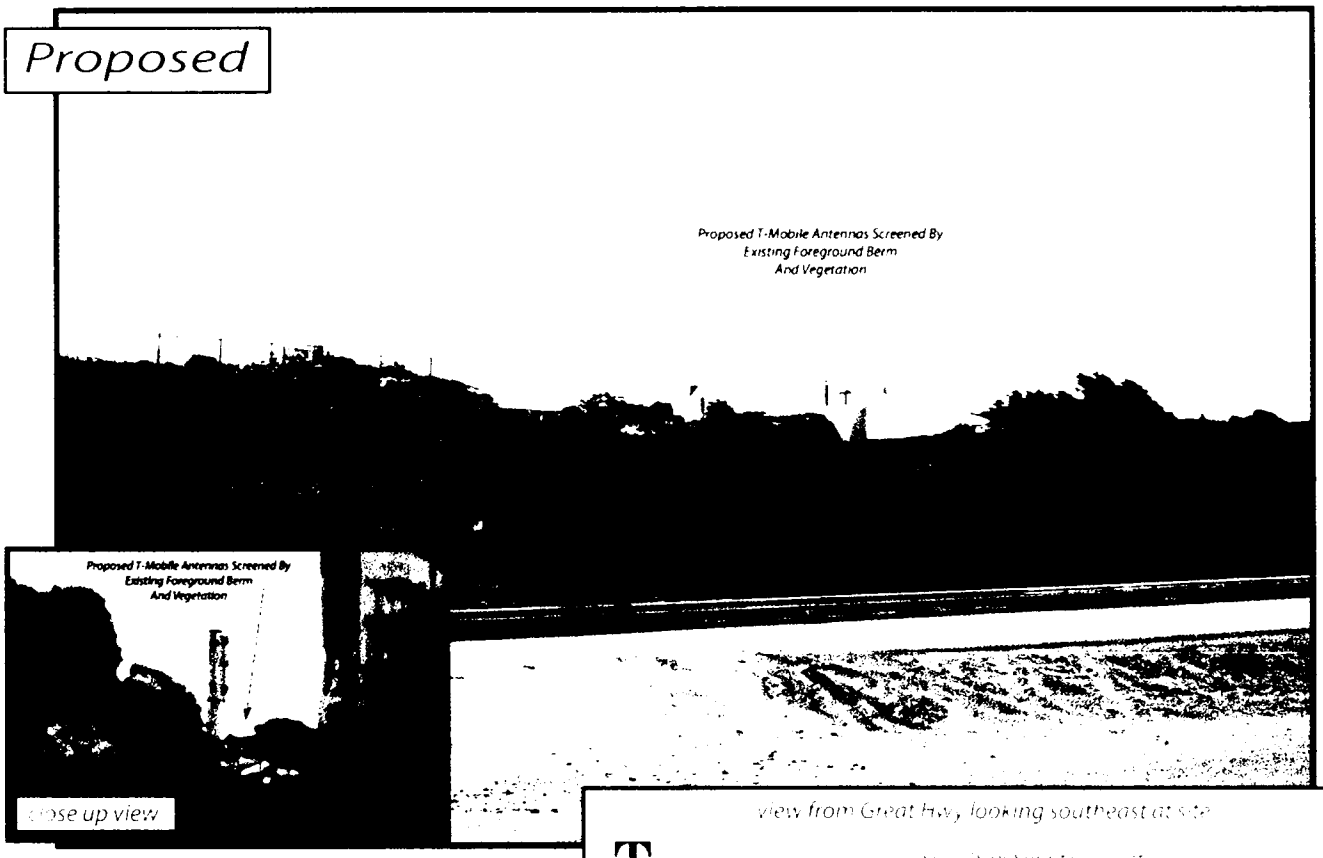

view from Great Hwy, looking southeast at site

T

Existing

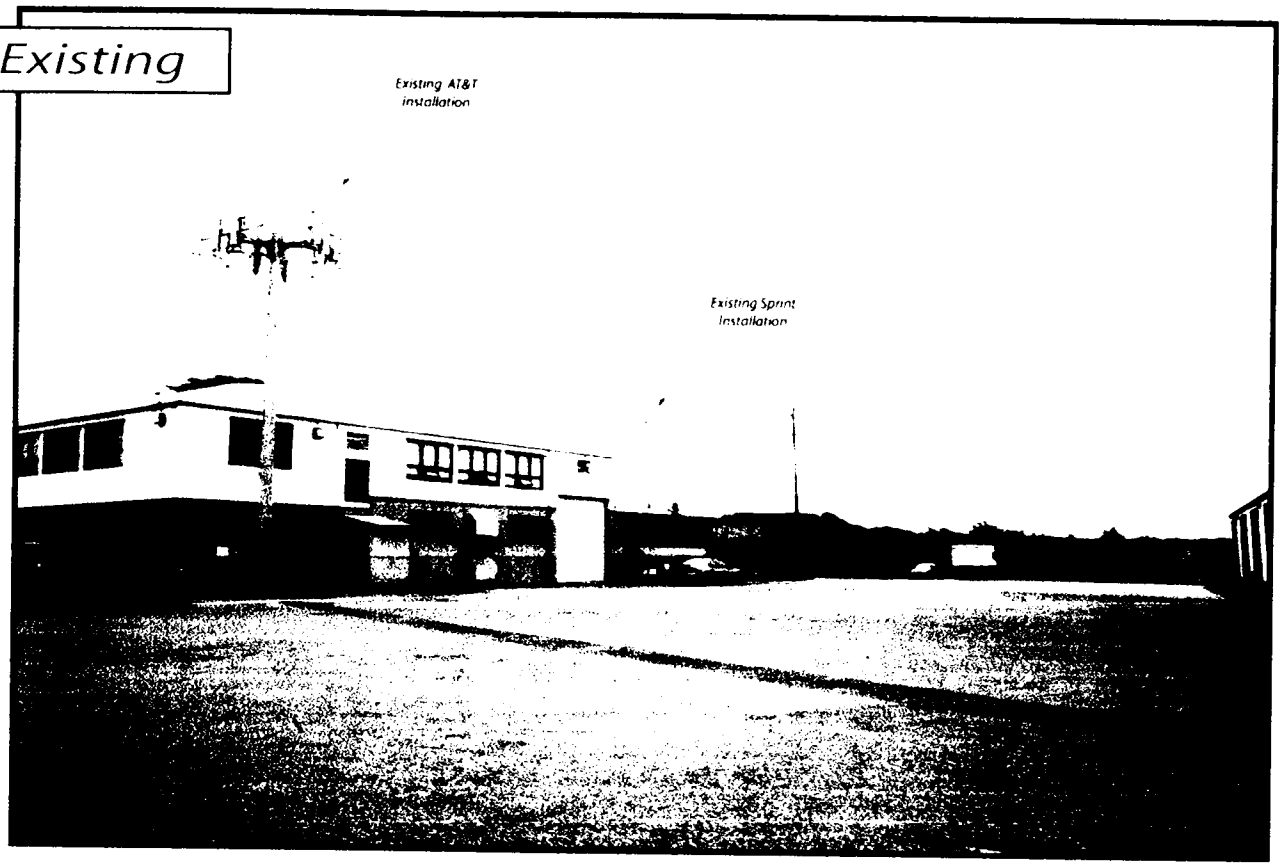

Proposed

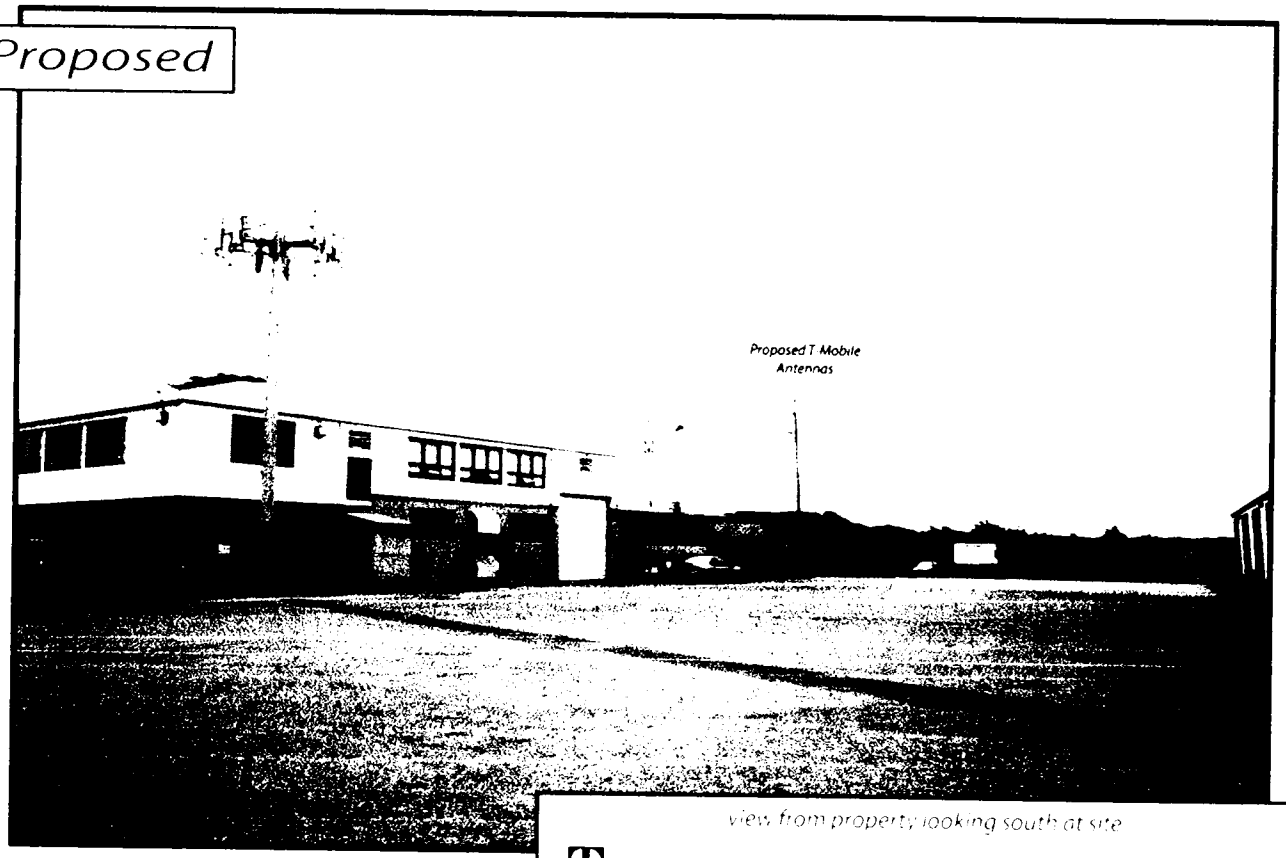

view, from property, looking south at site

T

[illegible] San Ramon Road San Francisco, CA

Existing

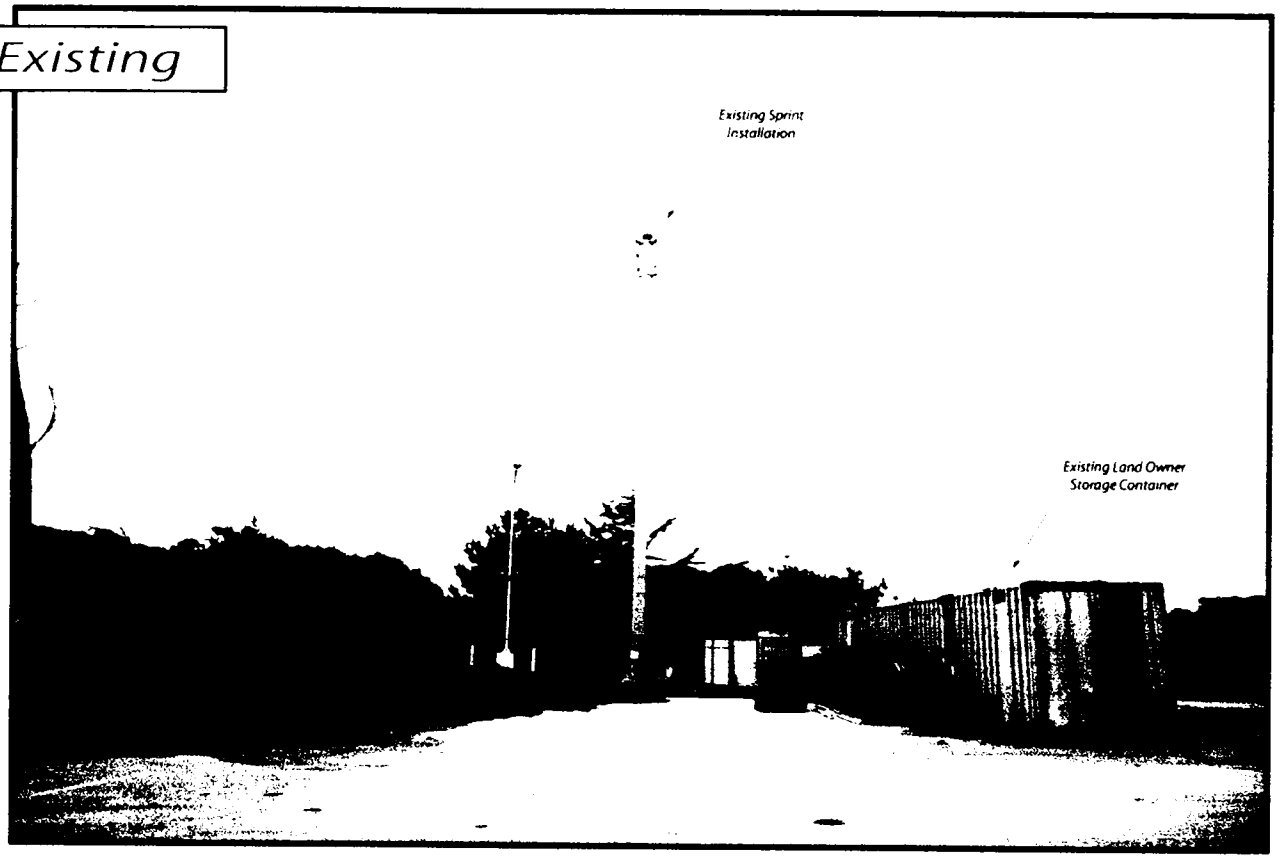

Proposed

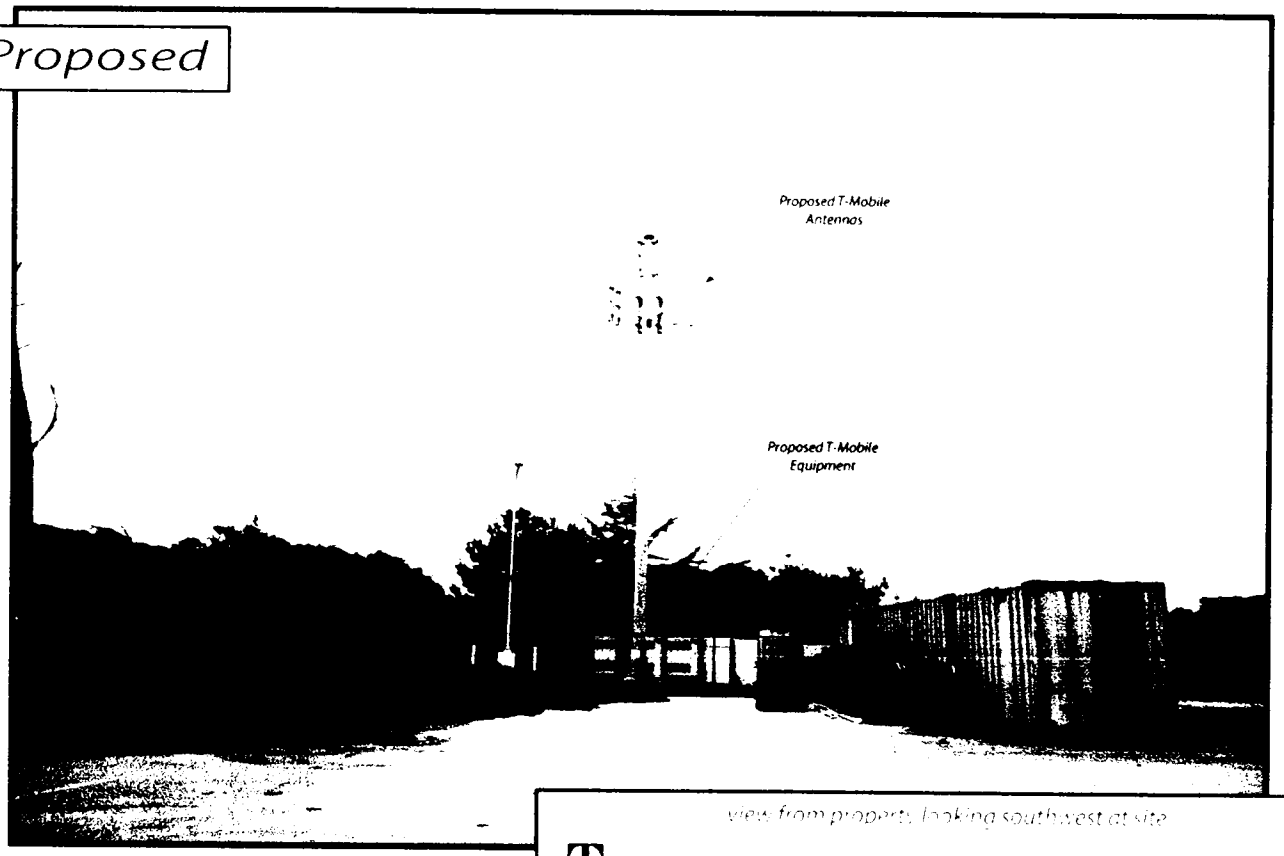

view from property looking southwest at site

T

Search Ring Objective:

Provides coverage in Lake Merced area of SF between State Hwy 35 and Great Hwy and some parts of SF Zoo.

Existing Coverage Map

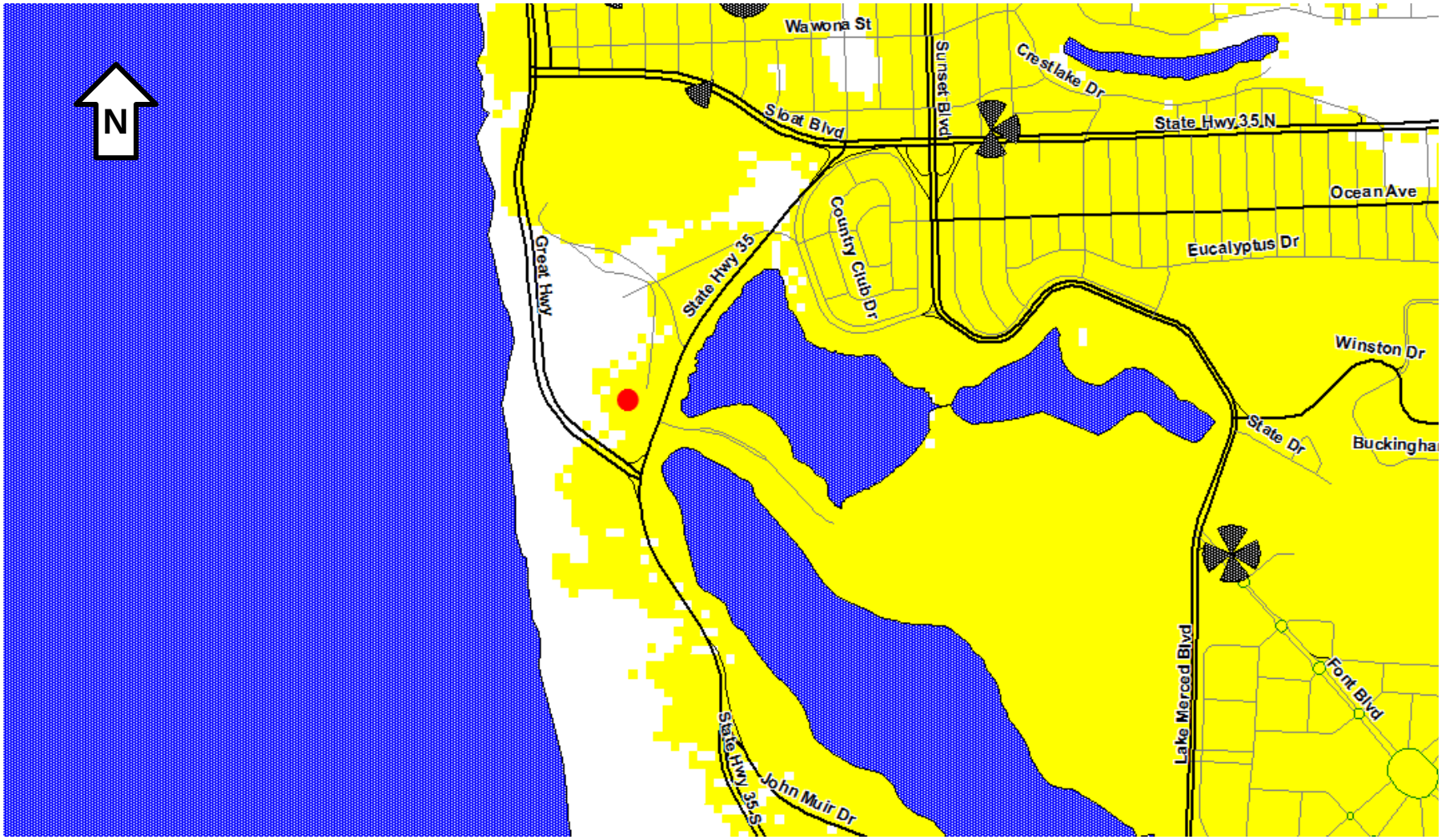

Existing Coverage (yellow areas illustrate current coverage at existing surrounding sites)

Existing Sites

Proposed Site

Proposed Coverage Map

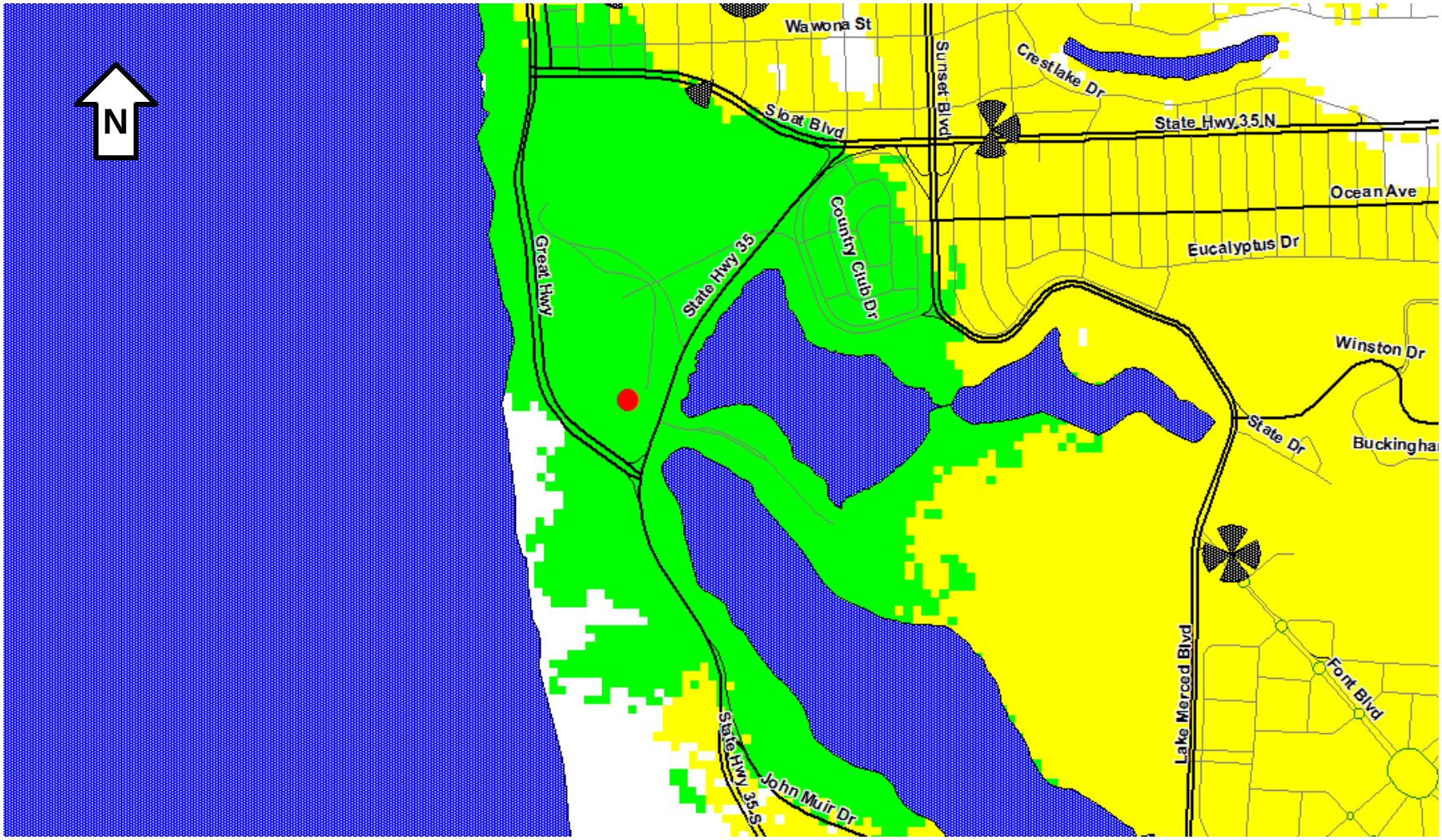

- Proposed Coverage (green area around proposed site illustrates filled coverage gap)
- Existing Coverage (yellow areas illustrate current coverage at existing surrounding sites)
- Existing Sites
- Proposed Site

Adjacent Sites

- SF13008A : 2560 Sloat Blvd, San Francisco
- SF03139A : 1740 Sloat Blvd, San Francisco
- SF13324A : 796 Font Blvd, San Francisco

T-Mobile

T-MOBILE WEST CORPORATION, a DELAWARE CORPORATION
SAN FRANCISCO AREA NEW SITE DEVELOPMENT

1855 GATEWAY BLVD., 9TH FLOOR, CONCORD, CA 94520

SF23283D
SPRINT MONOPOLE

100 ARMORY DRIVE
SAN FRANCISCO, CA 94132

USA NORTH
811/1-800-227-2600
AT LEAST TWO DAYS BEFORE YOU DIG
UNDERGROUND SERVICE ALERT OF NORTHERN CALIFORNIA

CODE COMPLIANCE

ALL WORK AND MATERIALS SHALL BE PERFORMED AND INSTALLED IN ACCORDANCE WITH THE CURRENT EDITIONS OF THE FOLLOWING CODES AS ADOPTED BY THE LOCAL GOVERNING AUTHORITIES. NOTHING IN THESE PLANS IS TO BE CONSTRUCTED TO PERMIT WORK NOT CONFORMING TO THESE CODES.

1. CALIFORNIA CODE OF REGULATIONS
2. 2007 CALIFORNIA BUILDING CODE
3. 2007 CALIFORNIA MECHANICAL CODE
4. 2007 CALIFORNIA PLUMBING CODE
5. 2007 CALIFORNIA ELECTRIC CODE
6. ANY LOCAL BUILDING CODE AMENDMENTS TO THE ABOVE
7. CITY/COUNTY ORDINANCES

HANDICAP REQUIREMENTS: FACILITY IS UNMANNED AND NOT FOR HUMAN HABITATION. HANDICAPPED ACCESS NOT REQUIRED IN ACCORDANCE WITH CALIFORNIA ADMINISTRATIVE STATE CODE PART 2, TITLE 24, CHAPTER 11B, SECTION 1103B.

PROJECT DESCRIPTION

THIS IS AN APPLICATION FOR A NEW, UNMANNED T-MOBILE SERVICES FACILITY CONSISTING OF EQUIPMENT CABINETS, PANEL ANTENNAS, CONNECTING ANTENNA CABLES, AND CONNECTING UTILITIES (ELECTRICAL AND TELEPHONE) CABLES. THE NEW T-MOBILE FACILITY IS PROPOSED TO BE CO-LOCATED ON AN EXISTING SPRINT PCS MONOPOLE WITHIN A PROPERTY CO-LOCATED BY THREE (3) EXISTING WIRELESS TELECOM FACILITIES – SPRINT PCS MONOPOLE, AT&T MONOPOLE AND VERIZON WIRELESS MONOPOLE.

PROJECT TYPE: ☐ RAWLAND ☒ CO-LOCATION ☐ TENANT IMPROVEMENT

EQUIPMENT LOCATION: ☒ OUTDOOR ☐ INDOOR ☐ ROOFTOP ☐ PRE-FABRICATED EQUIPMENT SHELTER

ANTENNA LOCATION: ☒ MONOPOLE ☐ ROOFTOP ☐ GUYED TOWER ☐ LATTICE TOWER ☐ UTILITY POLE ☐ WATER TANK

NO. OF ANTENNAS: 6 TOTAL (13.3"Wx55.9"Hx3.15"D) MOUNTED TO EXISTING MONOPOLE

LEASE AREA SIZE: 30'-0"X11'-0" (148.0 SQ. FT.)-LOCATED WITHIN A NEW 6'-0" HIGH CMU ENCLOSURE

DRIVING DIRECTIONS

FROM T-MOBILE OFFICE: CONCORD, CA

1. START AT 1855 GATEWAY BLVD, CONCORD GOING TOWARD CLAYTON RD
2. TURN RIGHT ON CLAYTON RD – GO 0.3 MI
3. TAKE RAMP ONTO CA-242 S – GO 0.9 MI
4. TAKE RAMP ONTO I-680 S TOWARD OAKLAND/SAN JOSE – GO 3.6 MI
5. TAKE THE OAKLAND/LAFAYETTE EXIT ONTO CA-24 W – GO 13.6 MI
6. TAKE THE SAN FRANCISCO/HAYWARD EXIT ONTO I-580 W TOWARD SAN FRANCISCO – GO 1.5 MI
7. TAKE THE SAN FRANCISCO LEFT EXIT ONTO I-80 W (PORTIONS TOLL) – GO 8.5 MI
8. MERGE ONTO US-101 S – GO 2.0 MI
9. TAKE THE DALY CITY EXIT ONTO I-280 S TOWARD DALY CITY – GO 4.3 MI
10. TAKE EXIT #49/JUNIPERO SERRA BLVD/JOHN DALY BLVD – GO 0.5 MI
11. TURN RIGHT ON JOHN DALY BLVD – GO 0.8 MI
12. TURN RIGHT ON LAKE MERCED BLVD – GO 0.5 MI
13. TURN LEFT ON JOHN MUIR DR – GO 1.1 MI
14. CONTINUE ON SKYLINE BLVD(CA-35 N) – GO 1.0 MI
15. MAKE A SHARP LEFT TURN ON HERBST RD – GO 0.2 MI
16. CONTINUE ON ARMORY DR (GATE ACCESS REQUIRED)
17. ARRIVE AT 100 ARMORY DR, SAN FRANCISCO, ON THE RIGHT

SHEET INDEX

SHEET	DESCRIPTION
T-1	TITLE SHEET
T-2	SAN FRANCISCO FIRE DEPARTMENT CHECKLIST
LS-1	SITE SURVEY
LS-2	SITE SURVEY
A-1	OVERALL SITE PLAN & CONSTRUCTION NOTES
A-2	EQUIPMENT AREA PLAN & ANTENNA LAYOUT
A-3	ELEVATIONS
A-4	DETAILS
A-5	SIGNAGE DETAILS
A-6	ANTENNA SPECIFICATIONS
S-1	STRUCTURAL NOTES & DETAILS
S-2	STRUCTURAL DETAILS
E-1	ELECTRICAL & TELEPHONE SPECIFICATIONS & UTILITIES NOTES
E-2	UTILITIES SITE PLAN, 1-LINE DIAGRAM & PANEL SCHEDULE
E-3	ENLARGED UTILITIES PLAN & DETAILS
E-4	GROUNDING PLAN, GENERAL GROUNDING NOTES, & DETAILS
E-5	GROUNDING DETAILS
E-6	ANTENNA & CABLE SCHEDULE, NOTES & DETAILS
N-1	GENERAL NOTES, LEGEND, & ABBREVIATIONS
N-2	BATTERIES-MATERIAL SAFETY DATA SHEET

PROJECT TEAM

ARCHITECT / ENGINEER:
DELTA GROUPS ENGINEERING, INC.
2362 McGAW AVENUE
IRVINE, CA 92614
CONTACT: HAROLD TRIAS
PHONE: (925) 468-0115
FAX: (925) 468-0355

APPLICANT/LESSEE:
T-MOBILE WEST CORPORATION
1855 GATEWAY BOULEVARD,
9TH FLOOR
CONCORD, CA 94520
CONTACT: BRAD CHAPMAN
PHONE: (415) 309-8979

SITE ACQUISITION
DELTA GROUPS ENGINEERING, INC.
5635 WEST LAS POSITAS BLVD.,
SUITE 403
PLEASANTON, CA 94588
CONTACT: JASON COLON
PHONE: (925) 468-0115
FAX: (925) 468-0355

ZONING MANAGER:
DELTA GROUPS ENGINEERING, INC.
5635 WEST LAS POSITAS BLVD.,
SUITE 403
PLEASANTON, CA 94588
CONTACT: TOM SWARNER
PHONE: (510) 435-3595

RF ENGINEER:
T-MOBILE WEST CORPORATION
1855 GATEWAY BOULEVARD,
9TH FLOOR
CONCORD, CA 94520
CONTACT: WENDELIO BUYAN
PHONE: (925) 521-3823

CONSTRUCTION MANAGER:
T-MOBILE WEST CORPORATION
1855 GATEWAY BOULEVARD,
9TH FLOOR
CONCORD, CA 94520
CONTACT: TIM FEHR
PHONE: (925) 521-3823

PROJECT INFORMATION

SITE ADDRESS:	100 ARMORY DRIVE SAN FRANCISCO, CA 94132
APN:	7281-004
LATITUDE:	37° 43' 37.50" N (NAD83)
LONGITUDE:	122° 30' 12.60" W (NAD83)
ZONING:	P-PUBLIC
JURISDICTION:	CITY OF SAN FRANCISCO
TELEPHONE:	AT&T
POWER:	PG&E

VICINITY MAP

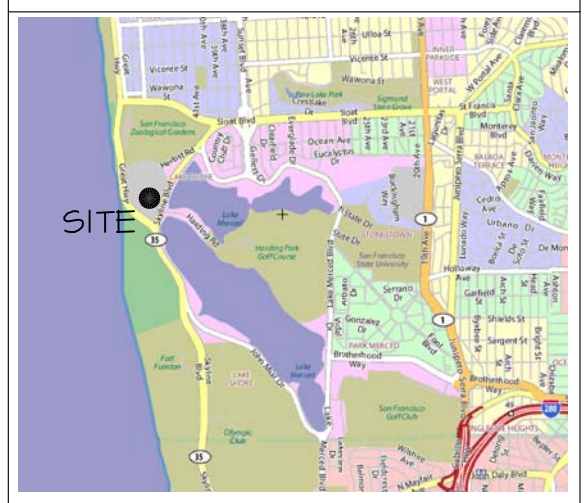

T-MOBILE APPROVALS

LANDLORD: _____
CONSTRUCTION MANAGER: _____
RF ENGINEER: _____
SITE ACQUISITION MANAGER: _____
ZONING MANAGER: _____
UTILITY COORDINATOR: _____
NETWORK OPERATIONS MANAGER: _____
PROGRAM REGIONAL MANAGER: _____

T-Mobile
T-MOBILE WEST CORPORATION, a DELAWARE CORPORATION
SAN FRANCISCO AREA NEW SITE DEVELOPMENT
1855 GATEWAY BLVD., 9TH FLOOR
CONCORD, CA 94520

PROJECT INFORMATION:
SF23283D
SPRINT MONOPOLE
100 ARMORY DRIVE
SAN FRANCISCO, CA 94321

CURRENT ISSUE DATE:
4/22/10

ISSUED FOR:
CD (100%)

REV.:	DATE:	DESCRIPTION:	BY:
1	8/17/09	CD (90%)	JS
2	10/12/09	CD (100%)	JS
3	11/3/09	CD (100%)	JS
4	3/3/10	CD (100%)	JS
5	4/14/10	CD (100%)	JS
6	4/22/10	CD (100%)	JS

PROJECT ARCHITECT/ENGINEER:
DELTA GROUPS ENGINEERING, INC.
CONSULTING ENGINEERS
5635 WEST LAS POSITAS BOULEVARD,
SUITE 403
PLEASANTON, CA 94588
OFFICE: (925) 468-0115
FAX: (925) 468-0335
DGE PROJECT NUMBER: P08TK041
DRAWN BY: JS

CONSULTANT:

DRAWN BY:	CHK.:	APV.:
JS	.	.

LICENSER:

SHEET TITLE:
TITLE SHEET

SHEET NUMBER:
T-1

SAN FRANCISCO FIRE DEPARTMENT
Division of Fire Prevention & Investigation
1660 Mission Street, 2nd Floor
San Francisco, California 94103-2414

Permit Application Checklist for Cellular Antenna Sites and all equipment serving them.

This check checklist shall be printed on a drawing sheet and submitted as part the plans submitted with any building permit application creating or modifying cellular antenna sites regardless of RF emission quantities. This checklist is designed to assist designers, installers, plan reviewers, and field inspectors. This checklist shall be prepared by the design professional and shall be stamped and wet-signed.

This document is not all-inclusive of all requirements for cellular antenna sites and it is the responsibility of the designer to research the applicable codes. Documents referenced for this bulletin are as follows:

FCC OET Bulletin 56 – Questions and Answers about Biological Effects and Potential Hazards of Radiofrequency Electromagnetic Fields (August 1999)
FCC OET Bulletin 65 – Evaluating Compliance with FCC Guidelines for Human Exposure to Radiofrequency Electromagnetic Fields (Ed. 97-01:August 1997)
FCC – A Local Government Official's Guide to Transmitting Antenna RF Emission Safety: Rules, Procedures, and Practical Guidance (June 2, 2000)
2001 California Building Code (2001 CBC)
2001 California Fire Code (2001 CFC)
2001 California Mechanical Code (2001 CMC)
2001 San Francisco Fire Code (2001 SFFC)
1999 NFPA 13 Automatic Sprinkler Systems
1999 NFPA 72 National Fire Alarm Code

☒ 1. Description of scope of work (both on the application and plans) shall match the actual work being done.

☒ 2. Plans shall include plan views and elevations showing all equipment locations and cable runs.

☒ 3. Submit on a drawing sheet the San Francisco Health Department Cellular Antenna Site (WTS) Checklist/Proposal/Engineer's RF Report. The FCC requires carriers to inform and prevent occupational exposure (i.e. building maintenance workers, fire fighters, etc.) The RF report shall **not** specify locking the roof access door to keep the general public off of the roof per 2001 SFFC 1207.7.1. The RF report shall be wet stamped and signed by an engineer.

☐ 4. Drawings shall reflect the striped/exclusion areas per the above RF Report with a ***minimum radius being 1 foot.***

☒ 5. Notice to Workers warning signage as applicable per the above RF Report.

PAGE 1

☒ Signage shall be in English, Mandarin and Spanish

☒ The signage shall be permanently mounted at the stairwell side of the roof-access stairwell door, in the Fire Control Room within proximity of the cell-site shutdown signage and any other space necessary to warn workers (ie. parapets, street side of fire escapes).

☒ The signage shall be clearly labeled and visible from any direction of approach.

☒ The sign shall be weatherproof with contrasting background and lettering colors and shall be readable from at least fifteen (15) feet from the sign.

☒ There is a yellow triangle around the antenna symbol (see ANSI C95.2-1999).

☒ Location and signage ***detail with site specific information*** shall be included on a drawing sheet.

☐ 6. Provide a quantitative three-dimensional perimeter of the RF levels if the antennas appear to encroach on any means of exiting.

☐ 7. Camouflaged antennas shall have ***4inch x 4inch signage permanently mounted to the exterior of the RF screen as provided below. These antennas shall also have the stripped exclusion area to the fullest extent of the antenna location with a minimum radius of 1 foot.***

☐ ***The signage shall be clearly labeled and visible from any direction of approach even if access is achieved from the building face (i.e. ladders, cherry picker, etc.).***

☐ ***The sign shall be weatherproof with contrasting background color and shall be recognizable from at least fifteen (15) feet from the sign.***

☐ ***The sign shall contain the yellow triangle around the antenna symbol (see ANSI C95.2-1999).***

☐ ***Location and signage detail shall be included on a drawing sheet.***

☒ 8. Plans shall show whether a new electrical service is installed for the cell site. In general, buildings should only have one electrical service. However, with the prior approval of the San Francisco Fire Department and the Electrical Inspection Division, buildings may have **one additional service** to serve rooftop antenna equipment, provided a permanent placard is provided at the location of each service disconnect stating the location of the other and identifying the equipment served by each service.

☒ 9. Provide route of all cables from their origin to the equipment (plan, elevation and section views). Cables/wiring shall not be allowed in exit enclosures or in front of dry standpipes (2001 CBC 1005.3.3.5).

☒ 10.

EITHER:

☐ Provide a manual battery disconnect:

☐ Instructional signage shall be provided on the Procedure To Disconnect or De-Energize Radio Frequency (RF) Signal for the above manual disconnect for the batteries.

PAGE 2

☐ Signage shall be permanently mounted next to the battery's electrical panel and clearly labeled in a phenolic label with a white background and black lettering. The title block shall be a red background and 1" high white lettering.

☐ The actual breaker(s) shall be a phenolic label (red background and white lettering) with lettering not less than 1/8" high.

☐ The signage shall also be like posted in the FCC Room within proximity of the Fire Alarm Panel and building's main electrical room within proximity of the main shutoff.

☐ A copy of the signage shall be included on a drawing sheet.

☐ Provide SFFD approved key lock box for equipment/electrical room for battery/equipment shutdown.

☐ The permanently mounted label above the lock box shall read "SFFD BATTERY DISCONNECT ACCESS KEY" and shall be a phenolic label with a red background and white lettering.

☐ Location and label of the key lock box shall be included on a drawing sheet.

OR:

☒ 24 hour/7 days a week telephone service center shut-down:

☒ Provide instructional signage for emergency shutdown of the cell site including telephone number and cell site identification number.

☒ The sign shall state that there is no manual shut down for the cell site and to call the contact number (the number shall be printed on the sign) with the site identification number (the number shall be printed on the sign) for immediate shut-down of the site 24hr/7days a week.

☒ The sign shall also state whether or not the back-up battery power to the antennas is also shut-down.

☒ The signage shall be permanently mounted next to the main electrical shut-off, in the FCC room within close proximity to the Fire Alarm Panel, at the battery cabinet and at the equipment room.

☒ The sign shall be clearly labeled in a phenolic label with a white background and black lettering. The title block shall be a red background and 1" high white lettering.

☒ A copy of the signage shall be included on a drawing sheet.

☐ 11. Is a new HVAC system being installed?

☐ Yes

☐ What is the volume of refrigerant used by the cooling unit(s)? _____

☐ What is the type of refrigerant per 2001 CMC? _____

PAGE 3

☐ Assure compliance with 2001 CFC Article 63.

☒ No

☐ 12. Plans state sequence of operations for any new detection, dampers, or fans.

☒ 13. Plans shall clearly show locations of batteries and battery cabinets.

☐ 14. Plans shall state whether the building is fully sprinklered or not.

☐ 15. In fully sprinklered buildings, equipment rooms shall be provided with sprinklers in accordance with NFPA 13.

☒ 16. Provide a table on a drawing sheet showing the manufacturer, model, type, amount of electrolyte per battery and total gallons of electrolyte of the batteries. Please comply with 2001 CFC Article 64.

When compliance with Article 64 of the 2001 California Fire Code is required, the following information shall be provided: (volume of electrolyte is >100 in sprinklered buildings, or >50 gallons in unsprinklered buildings)

☐ Rooftop battery rooms exceeding the above requirements shall be separated from the building and any openings as specified by the 2001 CBC and CMC.

☐ Plans state that a separate fire department permit will be obtained from SFFD Headquarters at 698 2nd St.

☐ Batteries shall be provided with safety venting caps.

☐ Battery rooms in other than groups A, E, I and R occupancies shall be provided with a one hour occupancy separation. In Groups A, E, I, and R occupancies, a two hour occupancy separation shall be provided around the battery room.

☐ Each rack or group of racks shall be provided with a liquid tight 4-inch spill control barrier which extends at least 1 inch beyond the rack in all directions.

☐ An approved method of neutralization shall be provided.

☐ Ventilation shall be in accordance with CFC sec. 6404.6.

☐ Doors leading into battery rooms shall be provided with approved signs in accordance with CFC sec. 6404.7. Include the language shown in that section.

☐ Batteries are seismically braced in accordance with the building code.

☐ An approved smoke detection system is installed in the room, and the system is supervised by an approved central, proprietary, or remote station service or a local alarm which will give an audible signal at a constantly attended location.

Prepared by: ALBERT R. H. TENG, P.E. - C041170
(Please include professional title and stamp)

Firm Name DELTA GROUPS ENGINEERING

Address 5635 WEST LAS POSITAS BLVD., SUITE 403, PLEASANTON, CA 94588

Phone Number (925) 468-0115

Fax Number (925) 468-0335

For further Information see the FCC website: http://www.fcc.gov/oet/rfsafety

PAGE 4

.

.

T-Mobile

T-MOBILE WEST CORPORATION, a DELAWARE CORPORATION
SAN FRANCISCO AREA NEW SITE DEVELOPMENT
1855 GATEWAY BLVD., 9TH FLOOR
CONCORD, CA 94520

PROJECT INFORMATION:

SF23283D
SPRINT MONOPOLE
100 ARMORY DRIVE
SAN FRANCISCO, CA 94321

CURRENT ISSUE DATE:
4/22/10

ISSUED FOR:
CD (100%)

REV.:	DATE:	DESCRIPTION:	BY:
1	8/17/09	CD (90%)	JS
2	10/12/09	CD (100%)	JS
3	11/3/09	CD (100%)	JS
4	3/3/10	CD (100%)	JS
5	4/14/10	CD (100%)	JS
6	4/22/10	CD (100%)	JS

PROJECT ARCHITECT/ENGINEER:

DELTA GROUPS ENGINEERING, INC.
CONSULTING ENGINEERS
5635 WEST LAS POSITAS BOULEVARD,
SUITE 403
PLEASANTON, CA 94588
OFFICE: (925) 468-0115
FAX: (925) 468-0335

DGE PROJECT NUMBER: P08TK041
DRAWN BY: JS

CONSULTANT:

DRAWN BY:	CHK.:	APV.:
JS	.	.

LICENSER:

SHEET TITLE:
SAN FRANCISCO FIRE DEPARTMENT CHECKLIST

SHEET NUMBER:
T-2

PARENT PROPERTY DESCRIPTION:

PARCEL ONE:
RUNNING FROM A POINT ON THE EASTERLY BOUNDARY OF FORT FUNSTON MILITARY RESERVATION AS ESTABLISHED BY UNITED STATES DISTRICT COURT JUDGMENT IN ACTION #221896, RECORDED MARCH 25, 1943 IN BOOK 3955 AT PAGE 425, OFFICIAL RECORDS OF THE CITY AND COUNTY OF SAN FRANCISCO, DISTANT THEREON NORTH 18° 03' 20" EAST 120 FEET FROM THE POINT OF INTERSECTION WITH THE EXTENSION EASTERLY OF THE SOUTHERLY BOUNDARY LINE OF THE ORIGINAL 41.4 ACRE TRACT OF LAND KNOWN AS UNITED STATES MILITARY RESERVATION, FORT FUNSTON, AS PER MAP THEREOF FILED JANUARY 21, 1902 IN MAP BOOK 1 AT PAGE 234, OFFICIAL RECORDS OF THE CITY AND COUNTY OF SAN FRANCISCO, AND RUNNING THENCE NORTH 77° 56' 40" WEST 50.276 FEET TO THE TRUE POINT OF BEGINNING OF THIS DESCRIPTION; THENCE NORTH 77° 56' 40" WEST 530 FEET; THENCE NORTH 18° 03' 20" EAST 540 FEET; THENCE SOUTH 71° 56' 40" EAST 306.998 FEET, TO A POINT IN A LINE PARALLEL WITH AND PERPENDICULARLY DISTANT 20 FEET WESTERLY FROM THE EASTERLY BOUNDARY LINE OF SAID 41.4 ACRE TRACT ABOVE DESCRIBED; THENCE NORTH 4° 48' 30" EAST 300 FEET; THENCE SOUTH 85° 11' 30" EAST 168.640 FEET TO A POINT IN A CURVE, WITH A RADIUS OF 800 FEET, CONCENTRIC WITH THE EASTERLY BOUNDARY OF SAID MILITARY RESERVATION AS ESTABLISHED BY COURT JUDGMENT, ABOVE DESCRIBED, AND RADIALLY DISTANT 50 FEET WESTERLY THEREFROM; THENCE SOUTHERLY ALONG SAID CONCENTRIC CURVE TO THE RIGHT, WITH A RADIUS OF 800 FEET, THE TANGENT TO SAID CURVE AT THE LAST DESCRIBED POINT BEARS SOUTH 14° 21' 54" EAST, A CENTRAL ANGLE OF 32° 25' 14" A DISTANCE OF 452.676 FEET, TO THE END OF SAID CURVE; THENCE SOUTH 18°03'20" WEST 386.357 FEET TO THE TRUE POINT OF BEGINNING.

EXCEPTING AN INTEREST IN AND TO ANY AND ALL OIL, MINERAL OR FISSIONABLE MATERIAL, AS RESERVED IN THE QUITCLAIMED DEED BY THE UNITED STATES OF AMERICA, RECORDED MAY 24, 1950 IN BOOK 5453, PAGE 277.

PARCEL TWO:
TOGETHER WITH THE RIGHT OF INGRESS TO AND EGRESS FROM THE ABOVE DESCRIBED PARCEL OF LAND OVER AND ALONG A ROADWAY WITHIN THE AREA DESCRIBED AS BEGINNING AT A POINT ON THE NORTHERLY BOUNDARY OF SAID 7.69 ACRE PARCEL OF LAND, DISTANT THEREON SOUTH 85° 11' 30" EAST 55 FEET FROM THE MOST NORTHERLY CORNER THEREOF; THENCE NORTH 4° 48' 30" EAST 175 FEET; THENCE NORTHERLY AND NORTHWESTERLY ALONG THE ARC OF A CURVE TO THE LEFT, TANGENT TO THE PRECEDING COURSE, RADIUS 140 FEET, CENTRAL ANGLE 41° 38', AN ARC DISTANCE OF 101.73 FEET; THENCE NORTH 36° 38' 30" WEST, TANGENT TO THE PRECEDING CURVE, 82.83 FEET TO THE SOUTHEASTERLY LINE OF THE ENTRANCE ROAD AND SKYLINE BOULEVARD TO FORT FUNSTON; THENCE NORTH 63° 35' 35" EAST ALONG LAST NAMED LINE 41.65 FEET TO THE SOUTHWESTERLY LINE OF SKYLINE BOULEVARD; THENCE SOUTHEASTERLY ALONG SAID LINE OF SKYLINE BOULEVARD, ON THE ARC OF A CURVE TO THE RIGHT, WHOSE TANGENT DEFLECTS 74° 57' 29" TO THE RIGHT FROM THE PRECEDING COURSE, RADIUS 850 FEET, CENTRAL ANGLE 9° 36' 35", AN ARC DISTANCE OF 142.56 FEET; THENCE LEAVING SAID LINE OF SKYLINE BOULEVARD AND RUNNING SOUTH 4° 48' 30" WEST, ALONG A LINE PARALLEL WITH AND PERPENDICULARLY DISTANT 40 FEET EASTERLY FROM THE FIRST COURSE OF THIS DESCRIPTION 244.62 FEET TO THE ABOVE MENTIONED NORTHERLY BOUNDARY OF THE SAID 7.69 ACRE TRACT; THENCE NORTH 85° 11' 30" WEST ALONG LAST NAMED BOUNDARY 40 FEET TO THE POINT OF BEGINNING.

NOTES

APN: 7281–004

OWNER: THE STATE OF CALIFORNIA AND THE CITY AND COUNTY OF SAN FRANCISCO

THE INFORMATION SHOWN HEREON IS BASED UPON A FIELD SURVEY AND A COMPILATION OF AVAILABLE RECORD AND TITLE INFORMATION. UNLESS NOTED OTHERWISE, PROPERTY LINES ARE DERIVED FROM RECORD INFORMATION. THIS IS NOT A BOUNDARY SURVEY.

THE EASEMENTS (IF ANY) THAT APPEAR ON THIS MAP HAVE BEEN PLOTTED BASED SOLELY ON INFORMATION CONTAINED IN THE PRELIMINARY TITLE REPORT BY: NORTH AMERICAN TITLE COMPANY, ORDER NO. 56901– 948487–09, DATED AUGUST 7, 2009. WITHIN SAID TITLE REPORT THERE ARE TEN (10) EXCEPTIONS LISTED, OF WHICH FOUR (4) ARE EASEMENTS AND ONE (1) OF WHICH CAN NOT BE PLOTTED.

THE UNDERGROUND UTILITIES (IF ANY) THAT APPEAR ON THIS MAP HAVE BEEN LOCATED BY FIELD OBSERVATION. THE SURVEYOR MAKES NO GUARANTEE THAT THE UNDERGROUND UTILITIES SHOWN COMPRISE ALL SUCH UTILITIES IN THE AREA, EITHER IN SERVICE OR ABANDONED. THE SURVEYOR FURTHER DOES NOT WARRANT THAT THE UNDERGROUND UTILITIES SHOWN ARE IN THE EXACT LOCATION INDICATED ALTHOUGH HE DOES STATE THAT THEY ARE LOCATED AS ACCURATELY AS POSSIBLE FROM THE INFORMATION AVAILABLE.

AFTER INVESTIGATION OF THE FEDERAL EMERGENCY MANAGEMENT AGENCY, FLOOD INSURANCE RATE MAP FOR THE AREA IN QUESTION, WE HAVE FOUND THAT THE LOCATION OF THE ABOVE NOTED SITE FALLS WITHIN AN AREA DESIGNATED AS "UNMAPPED AREA" THEREFORE WE CANNOT DETERMINE WHETHER OR NOT THE SITE WILL BE AFFECTED BY THE 100 YEAR FLOOD PLAIN.

THE LATITUDE AND LONGITUDE AS SHOWN WAS DETERMINED BY GPS OBSERVATIONS.

LAT. 37°43'37.5" N. NAD 83
LONG. 122°30'12.6" W. NAD 83
ELEV. 74.4 NAVD 88 (BASIS OF DRAWING)

LAT. 37°43'37.7" N. NAD 27
LONG. 122°30'08.7" W. NAD 27
ELEV. 71.6 NGVD 29

The information shown above meets or exceeds the requirements set forth in FAA order 8260.19c for 1–A accuracy (± 15' horizontally and ± 3' vertically). The horizontal datum (coordinates) are expressed as degrees, minutes and seconds, to the nearest tenth of a second. The vertical datum (heights) are expressed in feet and decimals thereof and are determined to the nearest 0.1 foot.

GROUND ELEV. = 74.4' A.M.S.L. (NAVD 88)

TOP OF STRUCTURE ELEV. = 127.9' A.M.S.L. (NAVD 88)

STRUCTURE HEIGHT = 53.5'

EASEMENTS PER TITLE REPORT:

4. COVENANTS, CONDITIONS, RESTRICTIONS AND EASEMENTS IN THE DOCUMENT RECORDED MAY 24, 1950 AS INSTRUMENT NO. Y–73673 IN BOOK 5453, PAGE 277 OF OFFICIAL RECORDS, WHICH PROVIDE THAT A VIOLATION THEREOF SHALL NOT DEFEAT OR RENDER INVALID THE LIEN OF ANY FIRST MORTGAGE OR DEED OF TRUST MADE IN GOOD FAITH AND FOR VALUE, BUT DELETING ANY COVENANT, CONDITION OR RESTRICTION INDICATING A PREFERENCE, LIMITATION OR DISCRIMINATION BASED ON RACE, COLOR, RELIGION, SEX, HANDICAP, FAMILIAL STATUS, NATIONAL ORIGIN, SEXUAL ORIENTATION, MARITAL STATUS, ANCESTRY, SOURCE OF INCOME OR DISABILITY, TO THE EXTENT SUCH COVENANTS, CONDITIONS OR RESTRICTIONS VIOLATE TITLE 42, SECTION 3604(C), OF THE UNITED STATES CODES OR APPLICABLE STATE LAW. LAWFUL RESTRICTIONS UNDER STATE AND FEDERAL LAW ON THE AGE OF OCCUPANTS IN SENIOR HOUSING OR HOUSING FOR OLDER PERSONS SHALL NOT BE CONSTRUED AS RESTRICTIONS BASED ON FAMILIAL STATUS.
5. AN EASEMENT FOR ROADS, PIPE LINES AND CABLES AND INCIDENTAL PURPOSES, RECORDED MAY 24, 1950 AS INSTRUMENT NO. Y–73673 IN BOOK 5453, PAGE 277 OF OFFICIAL RECORDS.
IN FAVOR OF: THE UNITED STATES OF AMERICA
AFFECTS: THE EXACT LOCATION AND EXTENT OF SAID EASEMENT IS NOT DISCLOSED OF RECORD
7. AN EASEMENT FOR LANDSCAPING, INCLUDING RETAINING WALLS, WALKWAYS, AND WATERING SYSTEMS AND INCIDENTAL PURPOSES, RECORDED IN BOOK F150, PAGE 625 OF OFFICIAL RECORDS.
IN FAVOR OF: CITY AND COUNTY OF SAN FRANCISCO
AFFECTS: PORTIONS AS DESCRIBED THEREIN
TERMS AND PROVISIONS CONTAINED IN THE ABOVE DOCUMENT.
9. AN UNRECORDED LEASE DATED JANUARY 1, 1997, EXECUTED BY THE STATE OF CALIFORNIA, ACTING BY AND THROUGH ITS DIRECTOR OF GENERAL SERVICES, WITH THE APPROVAL OF THE ADJUTANT GENERAL, CALIFORNIA MILITARY DEPARTMENT AS LESSOR AND SPRINT SPECTRUM, L.P., A DELAWARE LIMITED PARTNERSHIP AS LESSEE, AS DISCLOSED BY A MEMORANDUM OF PCS SITE AGREEMENT RECORDED FEBRUARY 25, 1997 AS INSTRUMENT NO. 97–G122894 OF OFFICIAL RECORDS.
DEFECTS, LIENS, ENCUMBRANCES OR OTHER MATTERS AFFECTING THE LEASEHOLD ESTATE, WHETHER OR NOT SHOWN BY THE PUBLIC RECORDS. SAID INSTRUMENT ALSO DISCLOSES AN EASEMENT FOR UNRESTRICTED RIGHTS OF ACCESS THERETO AND TO ELECTRIC AND TELEPONE FACILITIES.

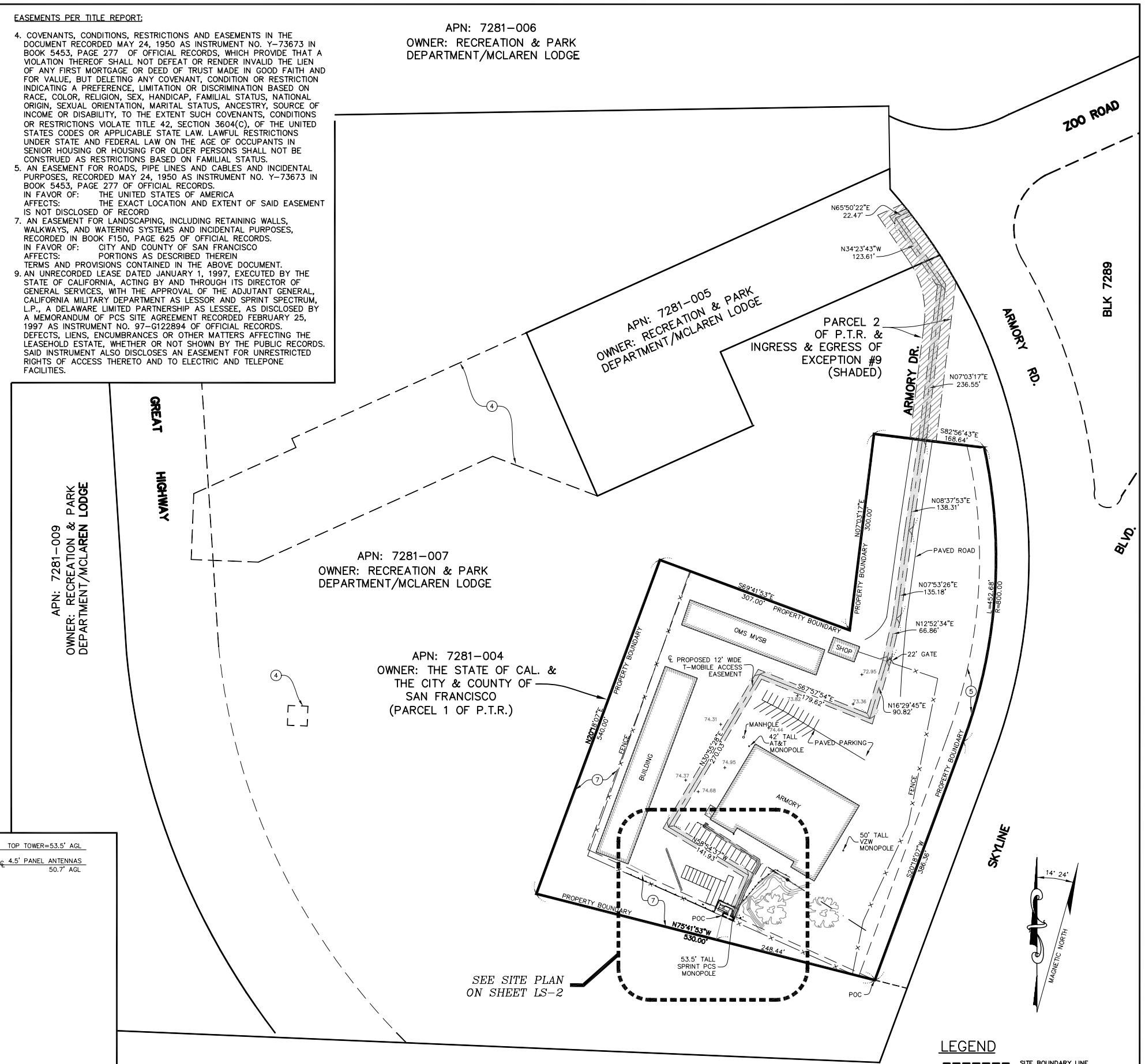

KEY MAP
1" = 80'

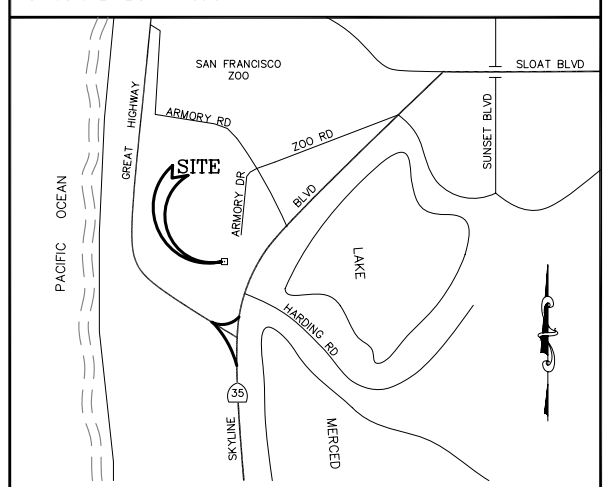

VICINITY MAP

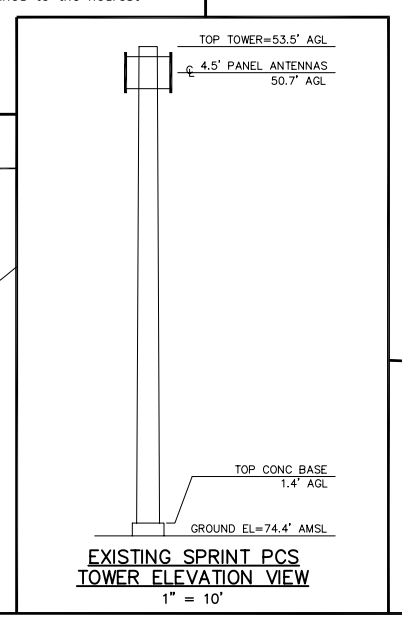

EXISTING SPRINT PCS TOWER ELEVATION VIEW
1" = 10'

LEGEND

	SITE BOUNDARY LINE
	OVERHEAD POWER LINE
	PROPERTY LINE
	POWER POLE
×100.00	SPOT ELEVATION
	EDGE OF PAVEMENT
	CONCRETE PAD
POB	POINT OF BEGINNING
POC	POINT OF COMMENCEMENT

T··Mobile·
1855 GATEWAY BLVD, 9TH FLOOR
CONCORD, CA 94520

PROJECT INFORMATION:
FORT FUNSTON
SF23283
100 ARMORY ROAD
SAN FRANCISCO, CA 94132
SAN FRANCISCO COUNTY

CURRENT ISSUE DATE:
10/29/09

ISSUED FOR:
CONSTRUCTION

REV.:	DATE:	ISSUED FOR:	BY:
0	07/23/09	PRELIMINARY	DL
1	08/10/09	LEASE	DL
2	08/20/09	CONSTRUCTION	DL
3	10/08/09	REVISION	DL
4	10/29/09	CLIENT REVISION	DL

PLANS PREPARED BY:
DELTA GROUPS ENGINEERING, INC.
CONSULTING ENGINEERS
5635 WEST LAS POSITAS, SUITE 403
PLEASANTON, CA 94588
TEL 925–468–0115 FAX 925–468–0355

CONSULTANT:
SMITHCO
SURVEYING & ENGINEERING
P.O. BOX 81626 BAKERSFIELD, CA 93380
PHONE: (661) 393-1217 FAX: (661) 393-1218

DRAWN BY:	CHCK'D BY:	APV'D BY:
DL	GJS	GJS

LICENSURE:

SHEET TITLE:
SITE SURVEY

SHEET NUMBER: LS-1
REVISION: 3
53–205

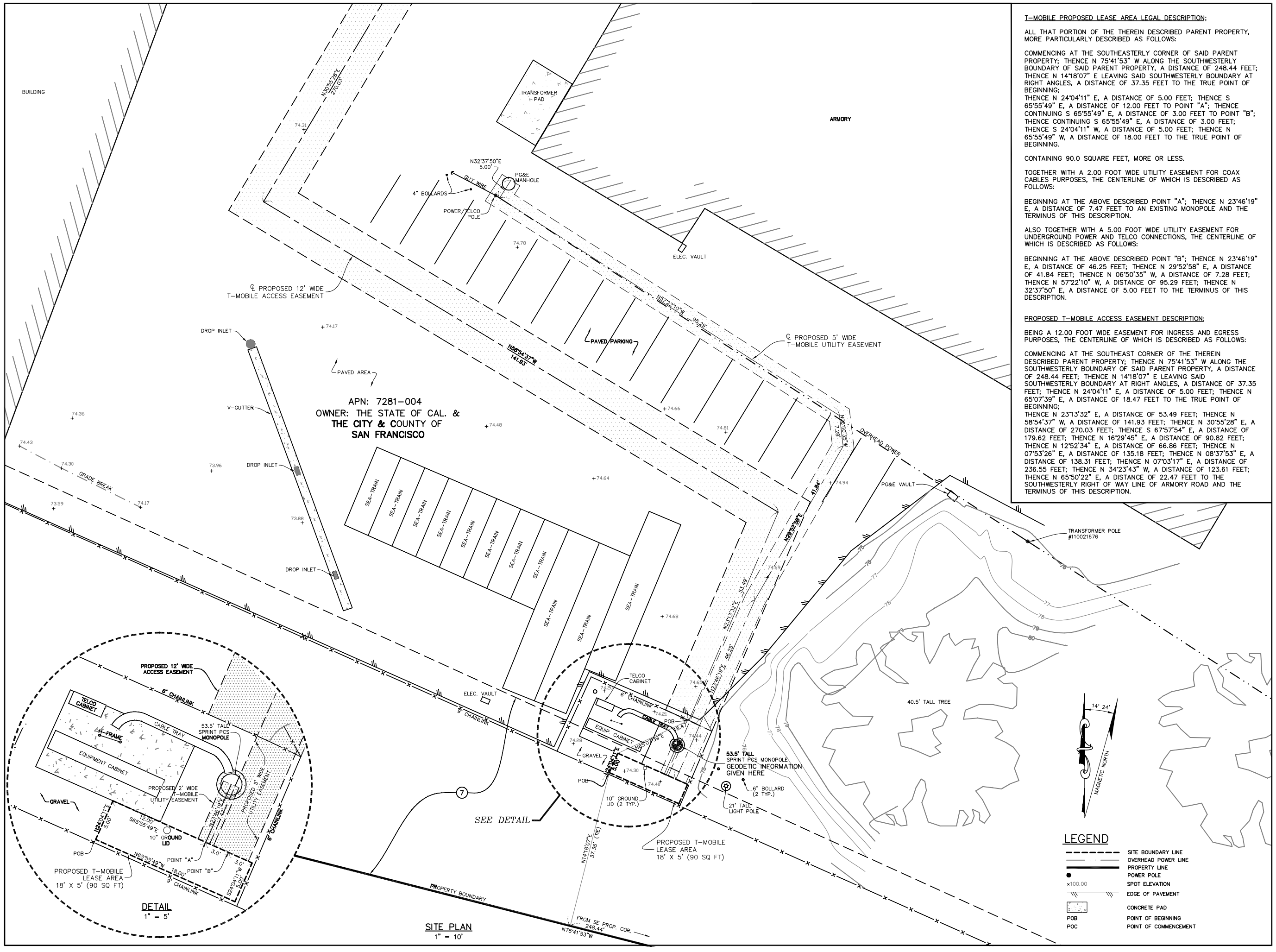

T-MOBILE PROPOSED LEASE AREA LEGAL DESCRIPTION:

ALL THAT PORTION OF THE THEREIN DESCRIBED PARENT PROPERTY, MORE PARTICULARLY DESCRIBED AS FOLLOWS:

COMMENCING AT THE SOUTHEASTERLY CORNER OF SAID PARENT PROPERTY; THENCE N 75°41'53" W ALONG THE SOUTHWESTERLY BOUNDARY OF SAID PARENT PROPERTY, A DISTANCE OF 248.44 FEET; THENCE N 14°18'07" E LEAVING SAID SOUTHWESTERLY BOUNDARY AT RIGHT ANGLES, A DISTANCE OF 37.35 FEET TO THE TRUE POINT OF BEGINNING;
THENCE N 24°04'11" E, A DISTANCE OF 5.00 FEET; THENCE S 65°55'49" E, A DISTANCE OF 12.00 FEET TO POINT "A"; THENCE CONTINUING S 65°55'49" E, A DISTANCE OF 3.00 FEET TO POINT "B"; THENCE CONTINUING S 65°55'49" E, A DISTANCE OF 3.00 FEET; THENCE S 24°04'11" W, A DISTANCE OF 5.00 FEET; THENCE N 65°55'49" W, A DISTANCE OF 18.00 FEET TO THE TRUE POINT OF BEGINNING.

CONTAINING 90.0 SQUARE FEET, MORE OR LESS.

TOGETHER WITH A 2.00 FOOT WIDE UTILITY EASEMENT FOR COAX CABLES PURPOSES, THE CENTERLINE OF WHICH IS DESCRIBED AS FOLLOWS:

BEGINNING AT THE ABOVE DESCRIBED POINT "A"; THENCE N 23°46'19" E, A DISTANCE OF 7.47 FEET TO AN EXISTING MONOPOLE AND THE TERMINUS OF THIS DESCRIPTION.

ALSO TOGETHER WITH A 5.00 FOOT WIDE UTILITY EASEMENT FOR UNDERGROUND POWER AND TELCO CONNECTIONS, THE CENTERLINE OF WHICH IS DESCRIBED AS FOLLOWS:

BEGINNING AT THE ABOVE DESCRIBED POINT "B"; THENCE N 23°46'19" E, A DISTANCE OF 46.25 FEET; THENCE N 29°52'58" E, A DISTANCE OF 41.84 FEET; THENCE N 06°50'35" W, A DISTANCE OF 7.28 FEET; THENCE N 57°22'10" W, A DISTANCE OF 95.29 FEET; THENCE N 32°37'50" E, A DISTANCE OF 5.00 FEET TO THE TERMINUS OF THIS DESCRIPTION.

PROPOSED T-MOBILE ACCESS EASEMENT DESCRIPTION:

BEING A 12.00 FOOT WIDE EASEMENT FOR INGRESS AND EGRESS PURPOSES, THE CENTERLINE OF WHICH IS DESCRIBED AS FOLLOWS:

COMMENCING AT THE SOUTHEAST CORNER OF THE THEREIN DESCRIBED PARENT PROPERTY; THENCE N 75°41'53" W ALONG THE SOUTHWESTERLY BOUNDARY OF SAID PARENT PROPERTY, A DISTANCE OF 248.44 FEET; THENCE N 14°18'07" E LEAVING SAID SOUTHWESTERLY BOUNDARY AT RIGHT ANGLES, A DISTANCE OF 37.35 FEET; THENCE N 24°04'11" E, A DISTANCE OF 5.00 FEET; THENCE N 65°07'39" E, A DISTANCE OF 18.47 FEET TO THE TRUE POINT OF BEGINNING;
THENCE N 23°13'32" E, A DISTANCE OF 53.49 FEET; THENCE N 58°54'37" W, A DISTANCE OF 141.93 FEET; THENCE N 30°55'28" E, A DISTANCE OF 270.03 FEET; THENCE S 67°57'54" E, A DISTANCE OF 179.62 FEET; THENCE N 16°29'45" E, A DISTANCE OF 90.82 FEET; THENCE N 12°52'34" E, A DISTANCE OF 66.86 FEET; THENCE N 07°53'26" E, A DISTANCE OF 135.18 FEET; THENCE N 08°37'53" E, A DISTANCE OF 138.31 FEET; THENCE N 07°03'17" E, A DISTANCE OF 236.55 FEET; THENCE N 34°23'43" W, A DISTANCE OF 123.61 FEET; THENCE N 65°50'22" E, A DISTANCE OF 22.47 FEET TO THE SOUTHWESTERLY RIGHT OF WAY LINE OF ARMORY ROAD AND THE TERMINUS OF THIS DESCRIPTION.

T-Mobile
1855 GATEWAY BLVD, 9TH FLOOR
CONCORD, CA 94520

PROJECT INFORMATION:

FORT FUNSTON
SF23283
100 ARMORY ROAD
SAN FRANCISCO, CA 94132
SAN FRANCISCO COUNTY

CURRENT ISSUE DATE:

10/29/09

ISSUED FOR:

CONSTRUCTION

REV.:	DATE:	ISSUED FOR:	BY:
0	07/23/09	PRELIMINARY	DL
1	08/10/09	LEASE	DL
2	08/20/09	CONSTRUCTION	DL
3	10/08/09	REVISION	DL
4	10/29/09	CLIENT REVISION	DL

PLANS PREPARED BY:

DELTA GROUPS ENGINEERING, INC.
CONSULTING ENGINEERS
5635 WEST LAS POSITAS, SUITE 403
PLEASANTON, CA 94588
TEL 925-468-0115 FAX 925-468-0355

CONSULTANT:

SMITHCO
SURVEYING & ENGINEERING
P.O. BOX 81626 BAKERSFIELD, CA 93380
PHONE: (661) 393-1217 FAX: (661) 393-1218

DRAWN BY:	CHCK'D BY:	APV'D BY:
DL	GJS	GJS

LICENSURE:

SHEET TITLE:

SITE SURVEY

SHEET NUMBER: LS-2 REVISION: 4

53-205

KEY NOTES:

1. EXISTING MONOPOLE - LOCATION OF NEW T-MOBILE PANEL ANTENNAS (2/A2)
2. NEW T-MOBILE POWER/TELCO ROUTING WITHIN A 5'-0" WIDE UTILITY EASEMENT (APPROX. 150 L.F. FROM POWER/TELCO P.O.C. TO EQUIPMENT AREA)
3. EXISTING JOINT UTILITY POLE (POLE # 110021676) WITH TRANSFORMER AND TELCO SPLICE JACKET (POWER & TELCO P.O.C.) (2/A4)
4. EXISTING DRAINAGE SWALE (TYP.)
5. EXISTING 6'-0 HIGH CHAIN LINK FENCE - TO BE REMOVED AND REPLACED ON THREE SIDES W/ A 6'-0" HIGH GRAY SPLIT FACED CMU BLOCK WALL
6. EXISTING TREES/LANDSCAPING (TYP.)
7. EXISTING LIGHT POLE (TYP.)
8. EXISTING POWER/TELCO OVERHEAD ROUTING (TYP.)
9. NEW 30'-0"x11'-0" T-MOBILE LEASE AREA (148 SQ. FT. TOTAL)- LOCATED AGAINST AN EXISTING 9'-0" HIGH CHAIN LINK FENCE W/ BARB WIRE (1/A2)
10. NEW 12'-0" WIDE ACCESS EASEMENT OVER EXISTING PAVED ROAD/PARKING LOT (APPROX. 1490 L.F. FROM PUBLIC R.O.W. ALONG ARMORY ROAD TO EQUIPMENT AREA)
11. EXISTING VERIZON FACILITY (TYP.)
12. EXISTING VERIZON 56'-0" HIGH MONOPOLE (TYP.) - THREE (3) TOTAL TOP FLUSH MOUNTED PANEL ANTENNAS, THREE (3) SECTORS, ONE (1) ANTENNA PER SECTOR
13. UNUSED
14. EXISTING AT&T 42'-0" HIGH MONOPOLE (TYP.) - TWELVE (12) TOTAL TOP EXTENSION-ARM MOUNTED PANEL ANTENNAS, THREE (3) SECTORS, FOUR (4) ANTENNAS PER SECTOR
15. EXISTING AT&T 22'-0 x 18'-0" PRE-FABRICATED EQUIPMENT SHELTER (TYP.)
16. EXISTING VERIZON 16'-0" x 11'-6" PRE-FABRICATED EQUIPMENT SHELTER (TYP.)

NOTES:
1. DO NOT SCALE DRAWINGS. ALL DIMENSIONS OF AND BETWEEN EXISTING BUILDINGS/STRUCTURES, OR RELATIVE DISTANCES AS SHOWN BETWEEN EXISTING BUILDINGS/STRUCTURES AND THE TRUE NORTH ARE TO BE CONFIRMED BY THE SURVEYOR.

2. POWER/TELCO ROUTING AND DESIGN ARE PRELIMINARY AND MUST BE VERIFIED WITH LOCAL UTILITY COMPANIES.

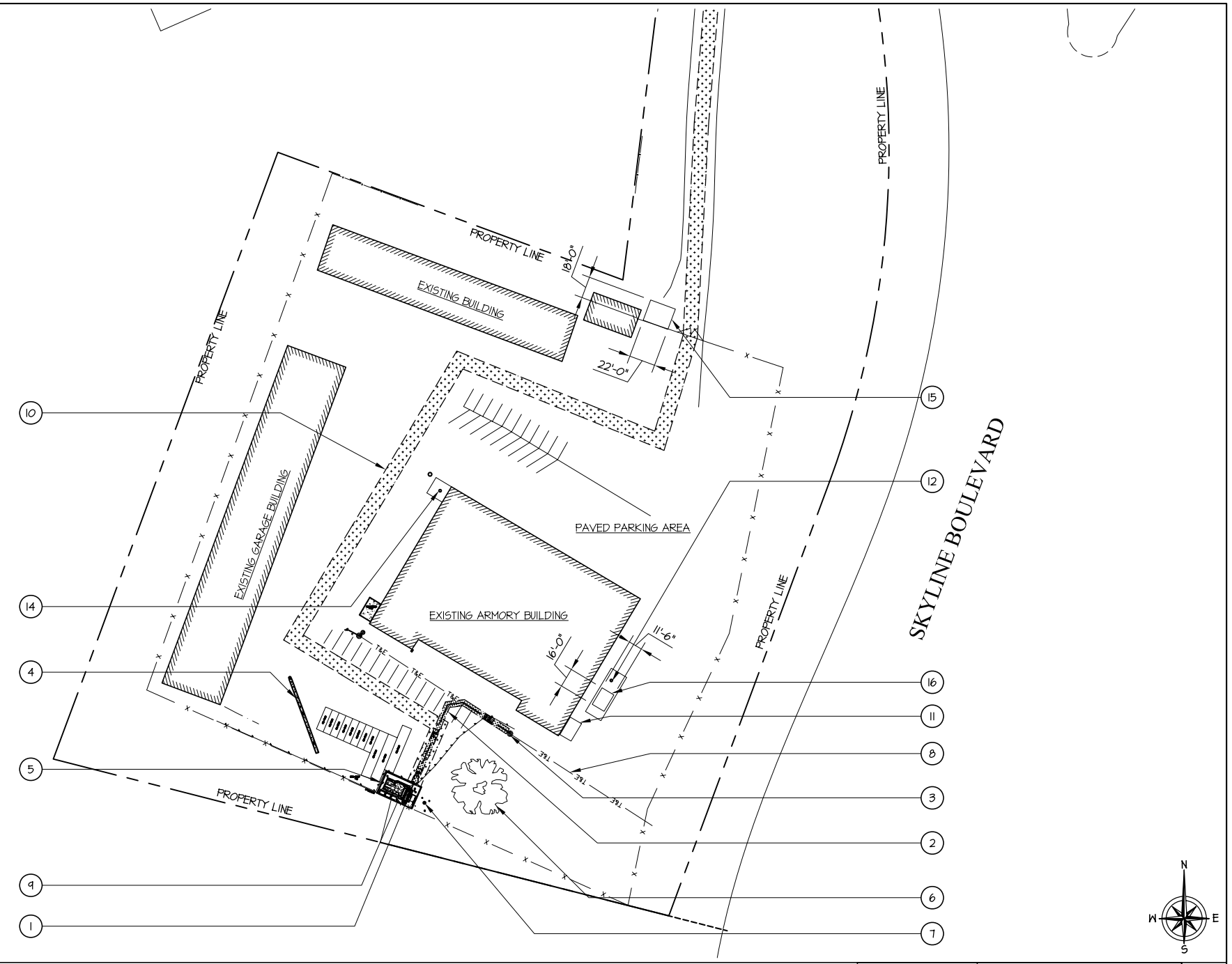

OVERALL SITE PLAN

SCALE: 1 inch = 50 ft (50' 0' 50' 100')

1

1. SURVEY INFORMATION SHOWN IS OBTAINED FROM A SURVEY PREPARED BY SMITHCO SURVEYING AND ENGINEERING, TITLED SITE SURVEY, DATED OCTOBER 29, 2009.

2. THE APPLICANT, ARCHITECT/ENGINEER, AND REPRESENTATIVES OF THE OWNER, MUST BE NOTIFIED AT LEAST TWO FULL DAYS PRIOR TO COMMENCEMENT OF CONSTRUCTION.

3. DO NOT EXCAVATE OR DISTURB BEYOND THE PROPERTY LINES OR LEASE LINES, UNLESS OTHERWISE NOTED.

4. DO NOT SCALE BUILDING DIMENSIONS FROM DRAWINGS.

5. ANY DRAIN AND/OR FIELD TILE ENCOUNTERED DURING CONSTRUCTION SHALL BE RETURNED TO ITS ORIGINAL CONDITION PRIOR TO COMPLETION OF WORK. SIZE, LOCATION AND TYPE OF ANY UNDERGROUND UTILITIES OR IMPROVEMENTS SHALL BE ACCURATELY NOTED AND PLACED ON AS-CONSTRUCTED DRAWINGS BY GENERAL CONTRACTOR AND ISSUED TO ARCHITECT/ENGINEER AT COMPLETION OF PROJECT.

6. ALL EXISTING UTILITIES, FACILITIES, CONDITIONS, AND THEIR DIMENSIONS SHOWN ON PLANS HAVE BEEN PLOTTED FROM AVAILABLE RECORDS. THE ARCHITECT/ENGINEER AND OWNER ASSUME NO RESPONSIBILITY WHATSOEVER AS TO THE SUFFICIENCY OR ACCURACY OF THE INFORMATION SHOWN ON THE PLANS OR THE MANNER OF THEIR REMOVAL OR ADJUSTMENT. CONTRACTOR SHALL BE RESPONSIBLE FOR DETERMINING EXACT LOCATION OF ALL EXISTING UTILITIES AND FACILITIES PRIOR TO START OF CONSTRUCTION. CONTRACTOR SHALL ALSO OBTAIN FROM EACH UTILITY COMPANY DETAILED INFORMATION RELATIVE TO WORKING SCHEDULES AND METHODS OF REMOVING OR ADJUSTING EXISTING UTILITIES.

7. CONTRACTOR SHALL VERIFY ALL EXISTING UTILITIES BOTH HORIZONTALLY AND VERTICALLY PRIOR TO START OF CONSTRUCTION. ANY DISCREPANCIES OR DOUBTS AS TO THE INTERPRETATION OF PLANS SHOULD BE IMMEDIATELY REPORTED TO THE ARCHITECT/ENGINEER FOR RESOLUTION AND INSTRUCTION, AND NO FURTHER WORK SHALL BE PERFORMED UNTIL THE DISCREPANCY IS CHECKED AND CORRECTED BY THE ARCHITECT/ENGINEER. FAILURE TO SECURE SUCH INSTRUCTION MEANS CONTRACTOR WILL HAVE WORKED AT HIS/HER OWN RISK AND EXPENSE. CONTRACT SHALL CALL LOCAL DIGGER HOT LINE FOR UTILITY LOCATIONS 48 HOURS PRIOR TO START OF CONSTRUCTION.

8. ALL NEW AND EXISTING UTILITY STRUCTURES ON SITE AND IN AREAS TO BE DISTRUBED BY CONSTRUCTION SHALL BE ADJUSTED TO FINISH ELEVATIONS PRIOR TO FINAL INSPECTION OF WORK.

9. THE BUILDING DEPARTMENT ISSUING THE BUILDING PERMIT SHALL BE NOTIFIED AT LEAST TWO WORKING DAYS PRIOR TO THE COMMENCEMENT OF WORK OR AS STIPULATED BY THE CODE ENFORCEMENT OFFICIAL HAVING JURISDICTION.

10. GRADING OF THE SITE WORK AREA IS TO BE SMOOTH AND CONTINUOUS IN SLOPE AND IS TO FEATHER INTO EXISTING GRADES AT THE GRADING LIMITS.

11. ALL TEMPORARY EXCAVATIONS FOR THE INSTALLATION OF FOUNDATIONS, UTILITIES, ETC., SHALL BE PROPERLY LAID BACK OR BRACED IN ACCORDANCE WITH CORRECT OCCUPATIONAL SAFETY AND HEALTH ADMINISTRATION (OSHA) REQUIREMENTS.

12. STRUCTURAL FILLS SUPPORTING PAVEMENTS SHALL BE COMPACTED TO 100% OF MAXIMUM STANDARD PROCTOR DRY DENSITY.

13. NEW GRADES NOT IN BUILDING AND DRIVEWAY IMPROVEMENT AREA TO BE ACHIEVED BY FILLING WITH APPROVED CLEAN FILL AND COMPACTED TO 95% OF STANDARD PROCTOR DENSITY.

14. ALL FILL SHALL BE PLACED IN UNIFORM LIFTS. THE LIFTS THICKNESS SHOULD NOT EXCEED THAT WHICH CAN BE PROPERLY COMPACTED THROUGHOUT ITS ENTIRE DEPTH WITH THE EQUIPMENT AVAILABLE.

15. ANY FILLS PLACED ON EXISTING SLOPES THAT ARE STEEPER THAN 10 HORIZONTAL TO 1 VERTICAL SHALL BE PROPERLY BENCHED INTO THE EXISTING SLOPE AS DIRECTED BY A GEOTECHNICAL ENGINEER.

16. THE GRADES WITHIN THE FENCED-IN AREA ARE TO BE ACHIEVED BY COMPACTING CLEAN FILL TO A DENSITY OF 90% OF STANDARD PROCTOR COVERING THE AREA WITH 6 MIL. VISQUENE (1' OVERLAP AT SEAMS) FOR WEED SUPPRESSION, THEN ACHIEVING FINISH GRADE BY ADDING 6" OF 3/4" CRUSHED STONE-NO FINES.

17. CONTRACTOR SHALL CLEAN ENTIRE SITE AFTER CONSTRUCTION SUCH THAT NO PAPERS, TRASH, WEEDS, BRUSH OR ANY OTHER DEPOSITS WILL REMAIN. ALL MATERIALS COLLECTED DURING CLEANING OPERATIONS SHALL BE DISPOSED OF OFF-SITE BY THE GENERAL CONTRACTOR.

18. ALL TREES AND SHRUBS WHICH ARE NOT IN DIRECT CONFLICT WITH THE IMPROVEMENTS SHALL BE PROTECTED BY THE GENERAL CONTRACTOR.

19. DRIVEWAY CONSTRUCTION, GRADING AND DRAINAGE WORK SHALL CONFORM TO CALIFORNIA STATE DEPARTMENT OF TRANSPORATION "STANDARD SPECIFICATION FOR THE ROAD AND BRIDGE CONSTRUCTION", LATEST EDITIONS, AND ALL APPLICABLE PROVISIONS OR LOCAL COUNTY ORDINANCES.

20. ALL SITE WORK SHALL BE CAREFULLY COORDINATED BY GENERAL CONTRACTOR WITH LOCAL UTILITY COMPANY, TELEPHONE COMPANY, AND ANY OTHER UTILITY COMPANIES HAVING JURISDICTION OVER THIS LOCATION.

CONSTRUCTION NOTES

2

T-Mobile

T-MOBILE WEST CORPORATION, a DELAWARE CORPORATION
SAN FRANCISCO AREA NEW SITE DEVELOPMENT
1855 GATEWAY BLVD., 9TH FLOOR
CONCORD, CA 94520

PROJECT INFORMATION:

SF23283D
SPRINT MONOPOLE
100 ARMORY DRIVE
SAN FRANCISCO, CA 94321

CURRENT ISSUE DATE:
4/22/10

ISSUED FOR:
CD (100%)

REV.:	DATE:	DESCRIPTION:	BY:
1	8/17/09	CD (90%)	JS
2	10/12/09	CD (100%)	JS
3	11/3/09	CD (100%)	JS
4	3/3/10	CD (100%)	JS
5	4/14/10	CD (100%)	JS
6	4/22/10	CD (100%)	JS

PROJECT ARCHITECT/ENGINEER:

DELTA GROUPS ENGINEERING, INC.
CONSULTING ENGINEERS
5635 WEST LAS POSITAS BOULEVARD,
SUITE 403
PLEASANTON, CA 94588
OFFICE: (925) 468-0115
FAX: (925) 468-0335

DGE PROJECT NUMBER: P08TK041
DRAWN BY: JS

CONSULTANT:

DRAWN BY:	CHK.:	APV.:
JS	.	.

LICENSER:

SHEET TITLE:
OVERALL SITE PLAN & CONSTRUCTION NOTES

SHEET NUMBER:
A-1

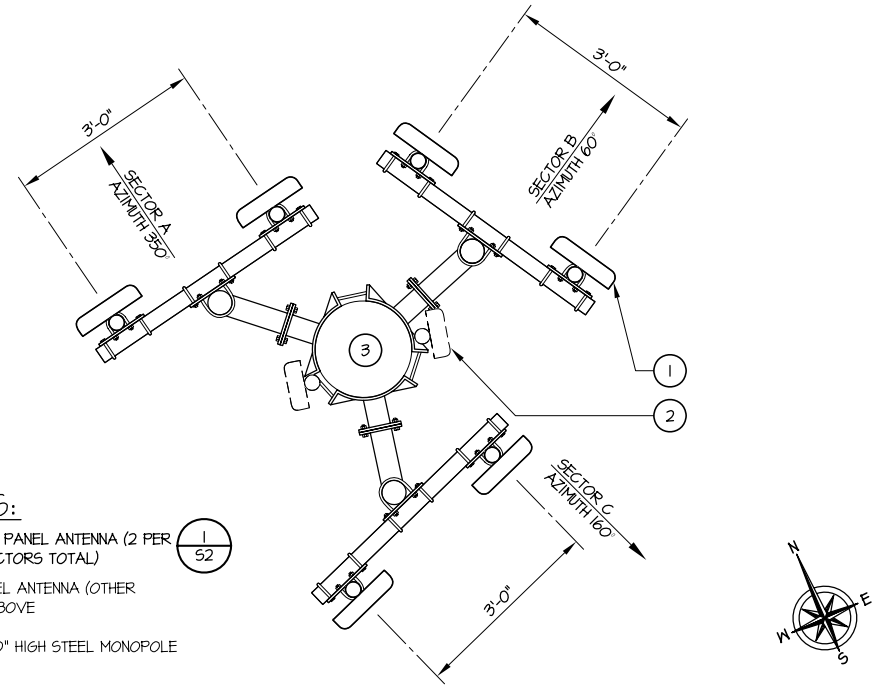

KEY NOTES:

1. NEW T-MOBILE PANEL ANTENNA (2 PER SECTOR, 3 SECTORS TOTAL) (1/S2)
2. EXISTING PANEL ANTENNA (OTHER CARRIER) - ABOVE
3. EXISTING 53'-0" HIGH STEEL MONOPOLE

ANTENNA LAYOUT

SCALE: 3/4 inch = 1 ft (1' 0' 1' 2' 3')

2

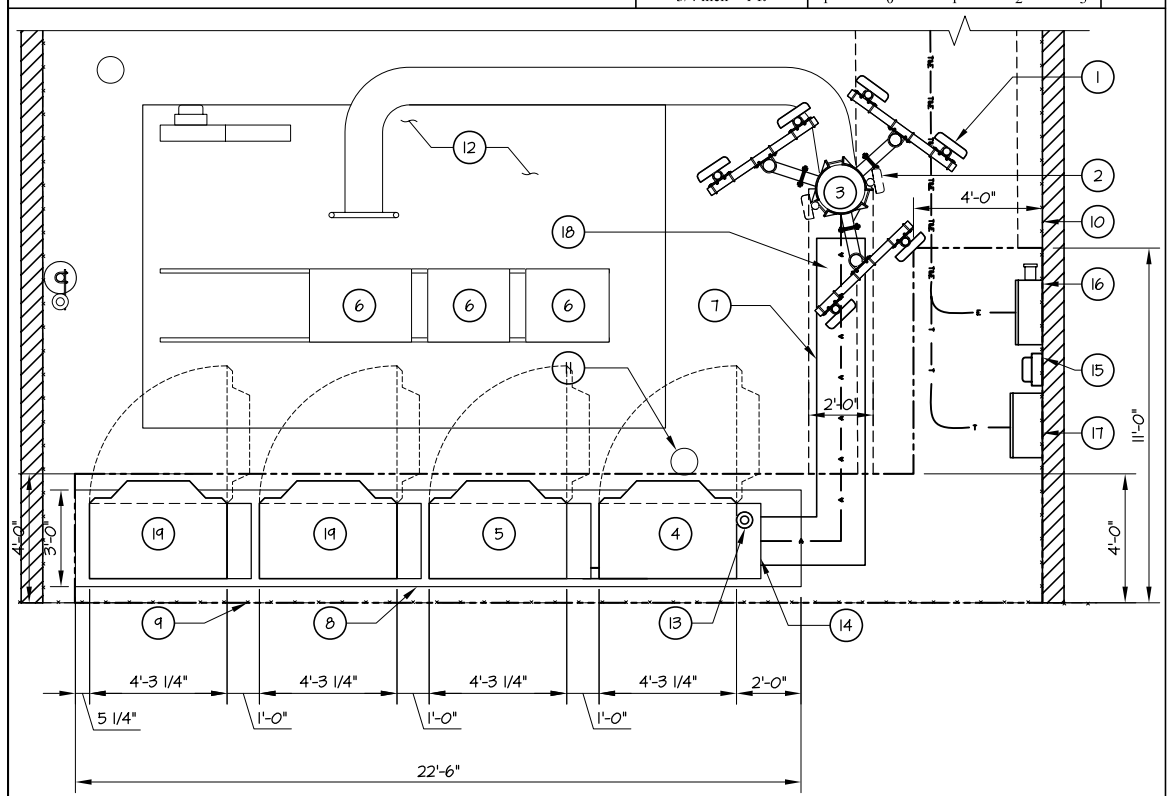

KEY NOTES:

1. NEW T-MOBILE PANEL ANTENNA (2 PER SECTOR, 3 SECTORS TOTAL) (1/S2)
2. EXISTING PANEL ANTENNA (OTHER CARRIER) - ABOVE
3. EXISTING 53'-0" HIGH STEEL MONOPOLE
4. NEW ERICSSON RBS 2102 EQUIPMENT CABINET (5/S1)
5. NEW ERICSSON RBS 3106 EQUIPMENT CABINET
6. EXISTING EQUIPMENT CABINETS (OTHER CARRIER)
7. NEW 24" WIDE COAXIAL CABLE TRAY
8. NEW 22'-6"x3'-0" CONCRETE PAD (3/S1)
9. EXISTING 9'-0" HIGH CAHIN LINK FENCE WITH 3 STRANDS OF BARB WIRE
10. NEW 6'-0" HIGH GRAY SPLIT FACED CMU BLOCK WALL - TO REPLACE 6'-0" HIGH CHAIN LINK FENCE ON 3 SIDES
11. EXISTING GROUND TEST WELL
12. EXISTING CONCRETE PAD
13. NEW T-MOBILE GPS ANTENNA-MOUNTED TO SIDE OF CABINET
14. NEW MCPA CABINET
15. NEW 200A METER W/ MAIN DISCONNECT (SMART METER)
16. NEW ELECTRICAL CABINET W/ EMERGENCY RECEPTACLE
17. NEW TELCO CABINET
18. NEW 24" WIDE COAXIAL CABLE EASEMENT
19. FUTURE T-MOBILE EQUIPMENT CABINET

EQUIPMENT LAYOUT

SCALE: 3/8 inch = 1 ft (3' 0' 3' 6')

3

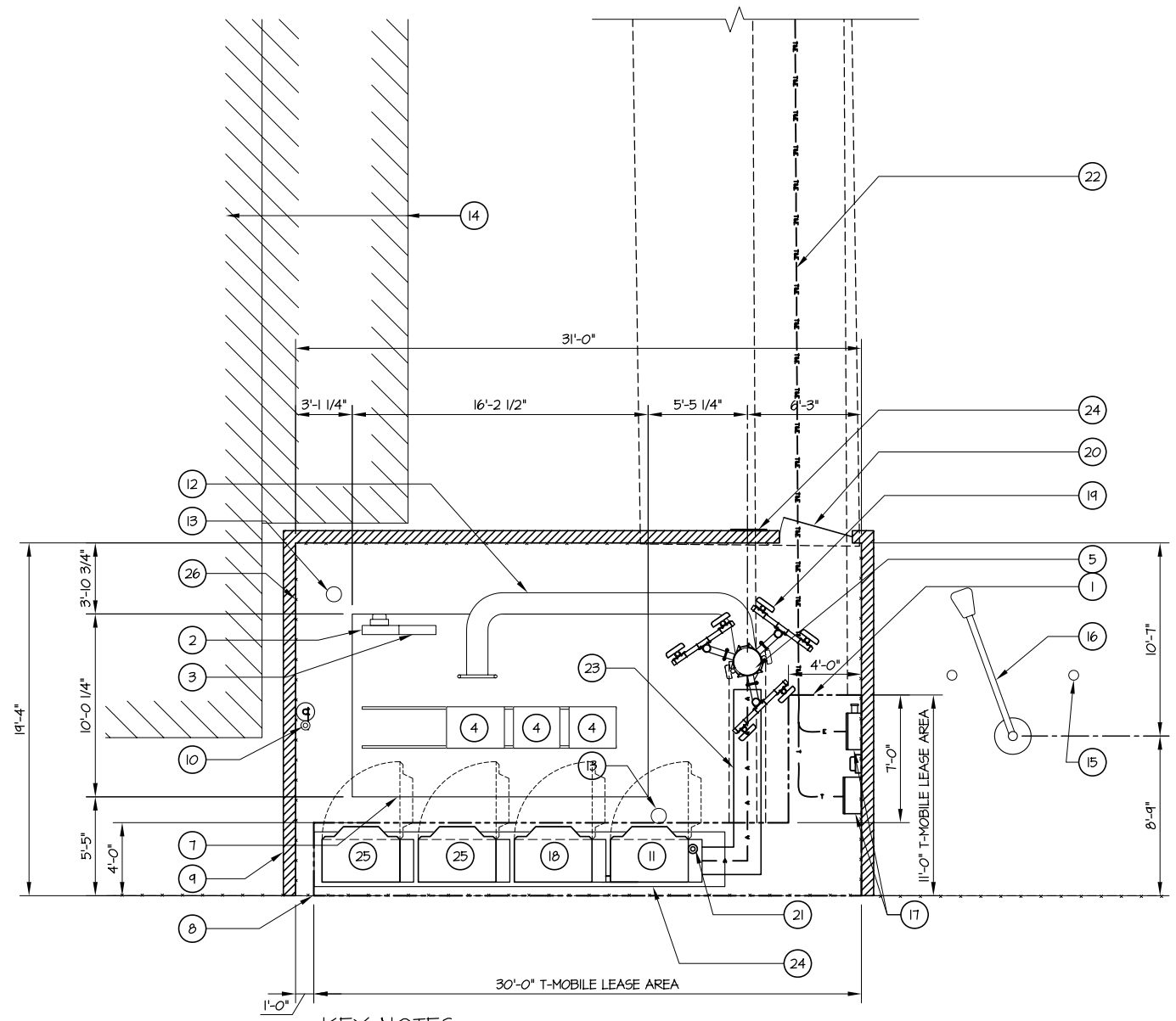

KEY NOTES:

1. NEW 30'-0"x11'-0" T-MOBILE LEASE AREA (148 SQ. FT. TOTAL)- LOCATED AGAINST A NEW 6'-0" HIGH GRAY SPLIT FACED CMU BLOCK WALL (3/-)
2. EXISTING POWER CABINET (OTHER CARRIER)
3. EXISTING TELCO CABINET (OTHER CARRIER)
4. EXISTING BTS CABINET (OTHER CARRIER)
5. EXISTING 53'-0" HIGH STEEL MONOPOLE
7. EXISTING CONCRETE PAD
8. EXISTING 9'-0 HIGH CHAIN LINK FENCE W/ 3 STRANDS OF BARB WIRE
9. NEW 6'-0" HIGH GRAY SPLIT FACED CMU BLOCK WALL - TO REPLACE 6'-0" HIGH CHAIN LINK FENCE ON 3 SIDES (6/S1)
10. EXISTING GPS ANTENNA (OTHER CARRIER)
11. NEW ERICSSON RBS 2102 EQUIPMENT CABINET
12. EXISTING 14" WIDE CABLE TRAY
13. EXISTING GROUND TEST WELL
14. EXISTING STORAGE CONTAINERS
15. EXISTING 6.5"ø BOLLARD (TYP. OF 2)
16. EXISTING LIGHT POLE
17. NEW CMU WALL-MOUNTED UTILITY CABINETS (2/S2)
18. NEW ERICSSON RBS 3106 EQUIPMENT CABINET
19. NEW T-MOBILE PANEL ANTENNAS (2/-)
20. EXISTING 4'-0" WIDE CHAIN LINK ACCESS GATE TO BE REMOVED AND REPLACED WITH NEW CORRUGATED METAL ACCESS GATE (4/A4)
21. NEW T-MOBILE GPS ANTENNA (1/A4)
22. NEW T-MOBILE POWER/TELCO ROUTING WITHIN A 5'-0" WIDE UTILITY EASEMENT-SEE 1/A1 FOR CONTINUATION - CONDUIT SIZE @ 2"ø (POWER) & 4"ø (TELCO)
23. NEW 24" WIDE COAXIAL CABLE TRAY ON SLEEPERS (3/A4)
24. NEW T-MOBILE SITE SIGNAGE LOCATION - SEE SHEET A5
25. FUTURE T-MOBILE EQUIPMENT CABINET
26. EXISTING 6'-0" HIGH CHAIN LINK FENCE - TO BE REMOVED

NOTES:
1. DO NOT SCALE DRAWINGS. ALL DIMENSIONS OF AND BETWEEN EXISTING BUILDINGS/STRUCTURES, OR RELATIVE DISTANCES AS SHOWN BETWEEN EXISTING BUILDINGS/STRUCTURES AND THE TRUE NORTH ARE TO BE CONFIRMED BY THE SURVEYOR.

2. POWER/TELCO ROUTING AND DESIGN ARE PRELIMINARY AND MUST BE VERIFIED WITH LOCAL UTILITY COMPANIES.

EQUIPMENT AREA PLAN

SCALE: 1/4 inch = 1 ft (4' 0' 4' 8')

1

T-Mobile

T-MOBILE WEST CORPORATION, a DELAWARE CORPORATION
SAN FRANCISCO AREA NEW SITE DEVELOPMENT
1855 GATEWAY BLVD., 9TH FLOOR
CONCORD, CA 94520

PROJECT INFORMATION:

SF23283D
SPRINT MONOPOLE
100 ARMORY DRIVE
SAN FRANCISCO, CA 94321

CURRENT ISSUE DATE:
4/22/10

ISSUED FOR:
CD (100%)

REV.:	DATE:	DESCRIPTION:	BY:
1	8/17/09	CD (90%)	JS
2	10/12/09	CD (100%)	JS
3	11/3/09	CD (100%)	JS
4	3/3/10	CD (100%)	JS
5	4/14/10	CD (100%)	JS
6	4/22/10	CD (100%)	JS

PROJECT ARCHITECT/ENGINEER:

DELTA GROUPS ENGINEERING, INC.
CONSULTING ENGINEERS
5635 WEST LAS POSITAS BOULEVARD,
SUITE 403
PLEASANTON, CA 94588
OFFICE: (925) 468-0115
FAX: (925) 468-0335

DGE PROJECT NUMBER: P08TK041
DRAWN BY: JS

CONSULTANT:

DRAWN BY:	CHK.:	APV.:
JS	.	.

LICENSER:

SHEET TITLE:
EQUIPMENT AREA PLAN & ANTENNA LAYOUT

SHEET NUMBER:
A-2

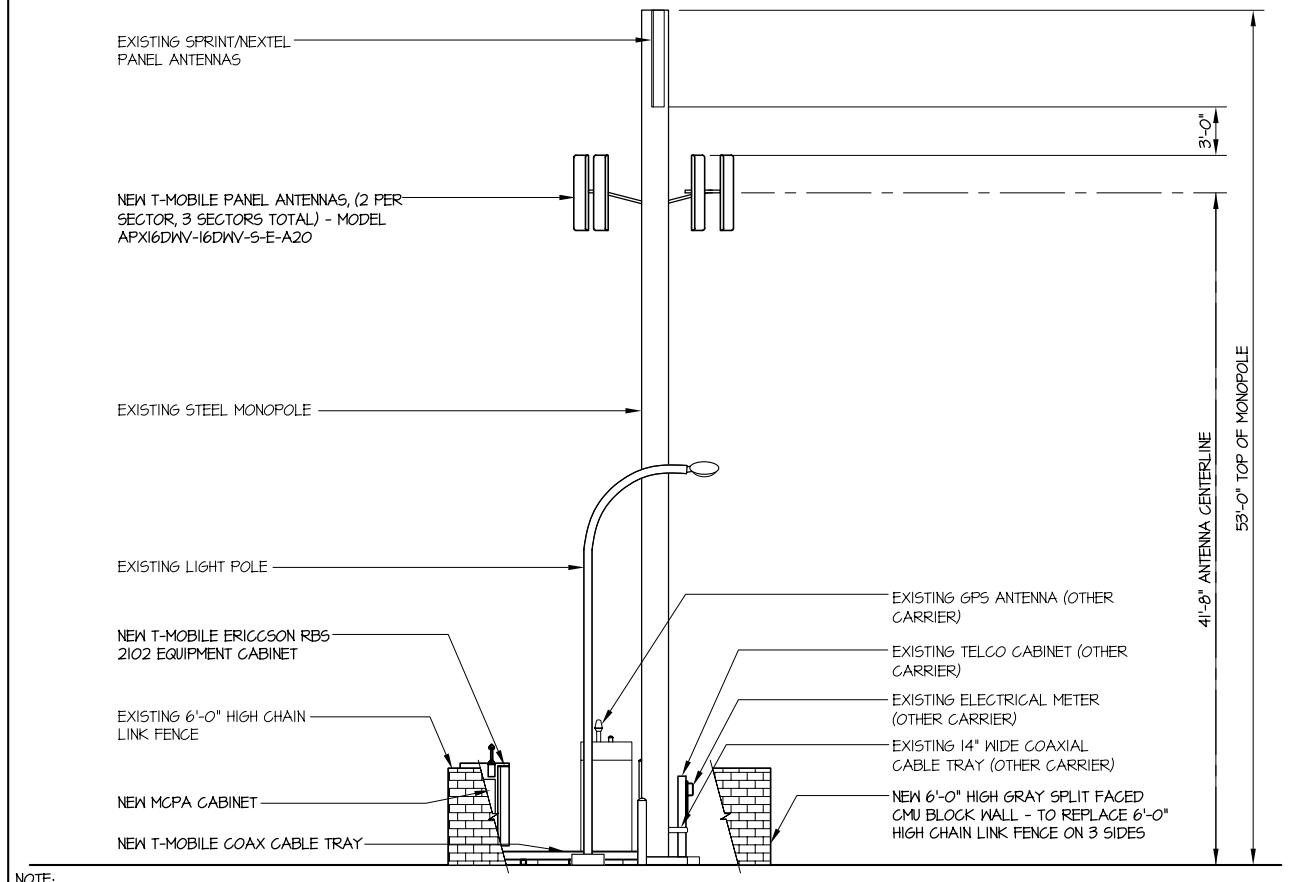

NOTE:
SEE 2/A3 FOR ADDITIONAL INFORMATION.

EAST ELEVATION | SCALE: 3/16 inch = 1 ft | 6' 0' 6' 12' | 3

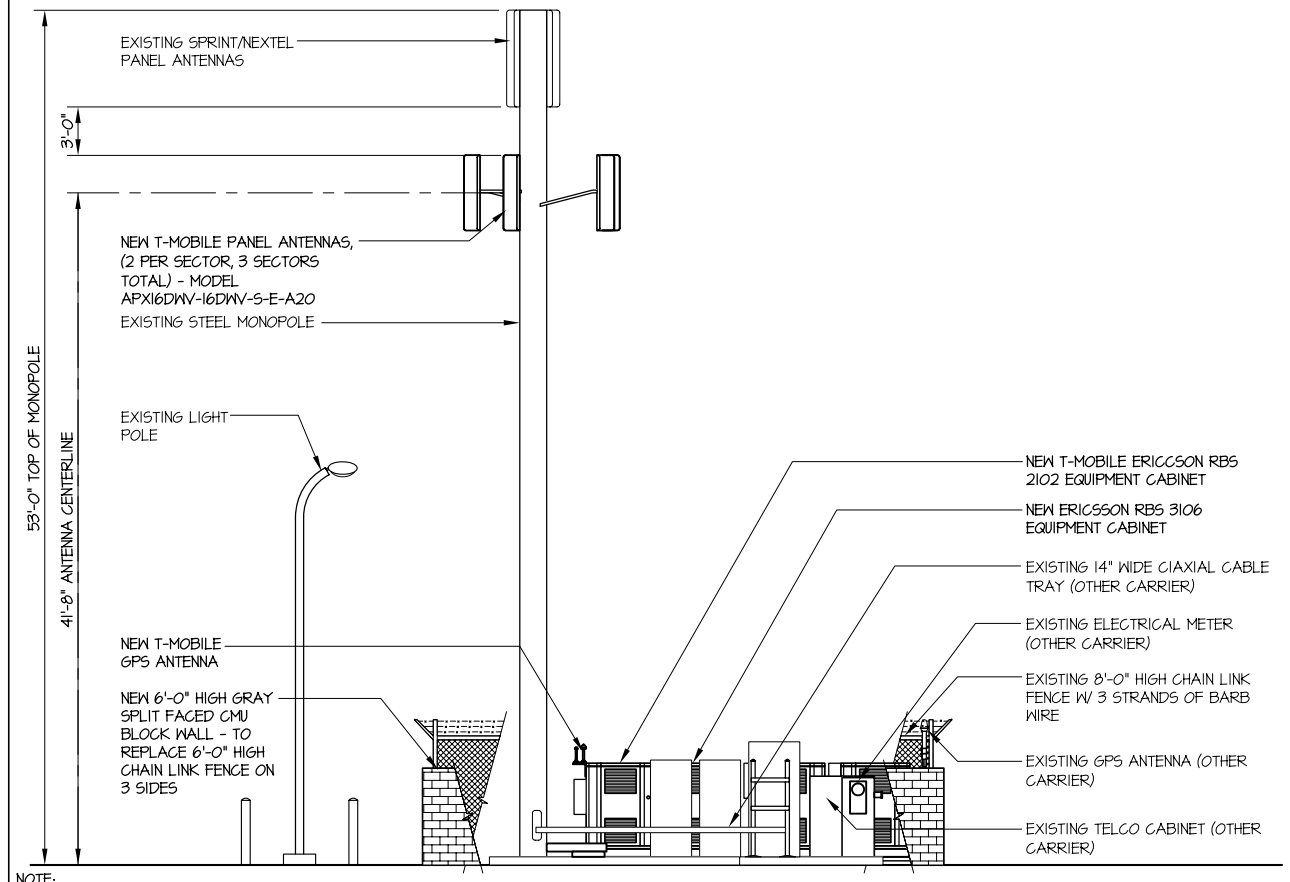

NOTE:
SEE 4/A3 FOR ADDITIONAL INFORMATION.

NORTH ELEVATION | SCALE: 3/16 inch = 1 ft | 6' 0' 6' 12' | 1

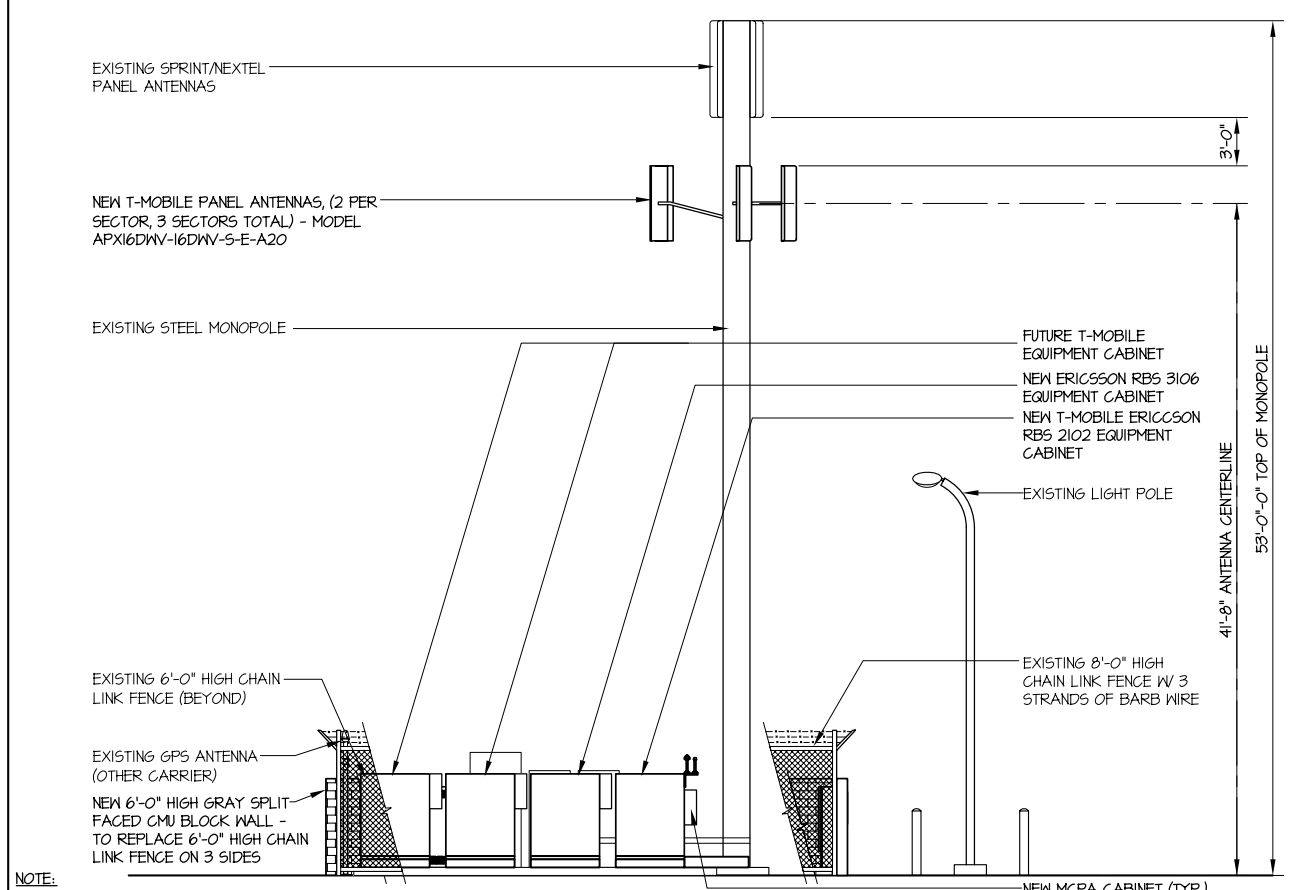

NOTE:
SEE 1/A3 FOR ADDITIONAL INFORMATION.

SOUTH ELEVATION | SCALE: 3/16 inch = 1 ft | 6' 0' 6' 12' | 4

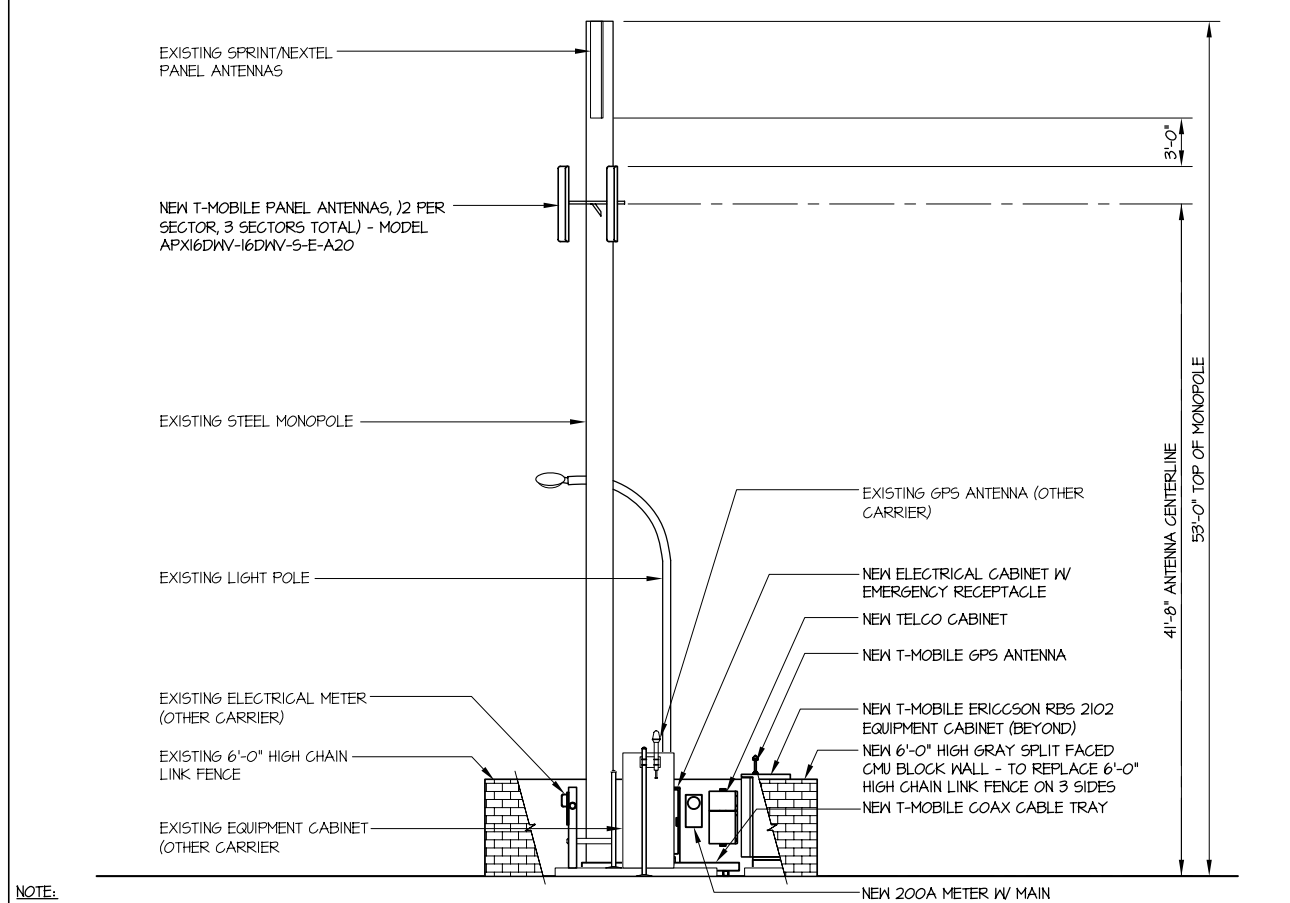

NOTE:
SEE 3/A3 FOR ADDITIONAL INFORMATION.

WEST ELEVATION | SCALE: 3/16 inch = 1 ft | 6' 0' 6' 12' | 2

T-Mobile

T-MOBILE WEST CORPORATION, a DELAWARE CORPORATION
SAN FRANCISCO AREA NEW SITE DEVELOPMENT
1855 GATEWAY BLVD., 9TH FLOOR
CONCORD, CA 94520

PROJECT INFORMATION:

SF23283D
SPRINT MONOPOLE
100 ARMORY DRIVE
SAN FRANCISCO, CA 94321

CURRENT ISSUE DATE:
4/22/10

ISSUED FOR:
CD (100%)

REV.:	DATE:	DESCRIPTION:	BY:
1	8/17/09	CD (90%)	JS
2	10/12/09	CD (100%)	JS
3	11/3/09	CD (100%)	JS
4	3/3/10	CD (100%)	JS
5	4/14/10	CD (100%)	JS
6	4/22/10	CD (100%)	JS

PROJECT ARCHITECT/ENGINEER:

DELTA GROUPS ENGINEERING, INC.
CONSULTING ENGINEERS
5635 WEST LAS POSITAS BOULEVARD,
SUITE 403
PLEASANTON, CA 94588
OFFICE: (925) 468-0115
FAX: (925) 468-0335

DGE PROJECT NUMBER: P08TK041
DRAWN BY: JS

CONSULTANT:

DRAWN BY:	CHK.:	APV.:
JS	.	.

LICENSER:

SHEET TITLE:
ELEVATIONS

SHEET NUMBER:
A-3

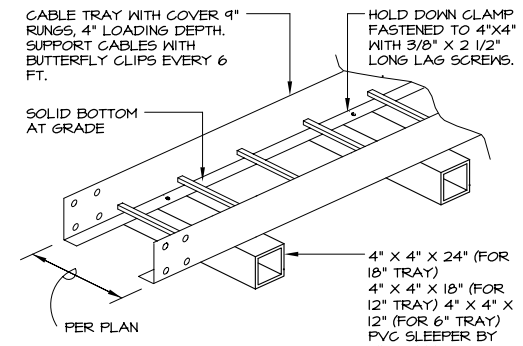

NOTE:
1. RUN #2 AWG BTCW GROUND CONDUCTOR ALONG CABLE TRAY AND GROUND AT BOTH ENDS.

2. CABLE TRAYS SHALL BE FREE OF SHARP OBJECTS AND BURRS WHICH COULD INJURE CABLES. COVERS SHALL BE FASTENED USING HOLD DOWN CLIPS. SHEET METAL SCREWS ARE NOT ACCEPTABLE.

HORIZONTAL CABLE TRAY | 3

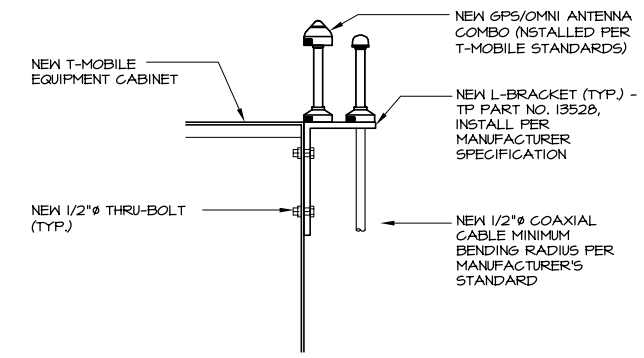

GPS ANTENNA MOUNT | 1

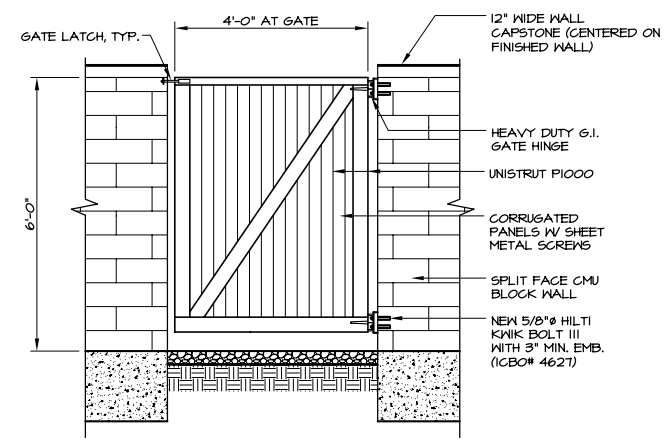

NOTE:
ALL METALLIC COMPONENTS TO BE HOT DIP GALVANIZED

ACCESS GATE DETAIL | 4

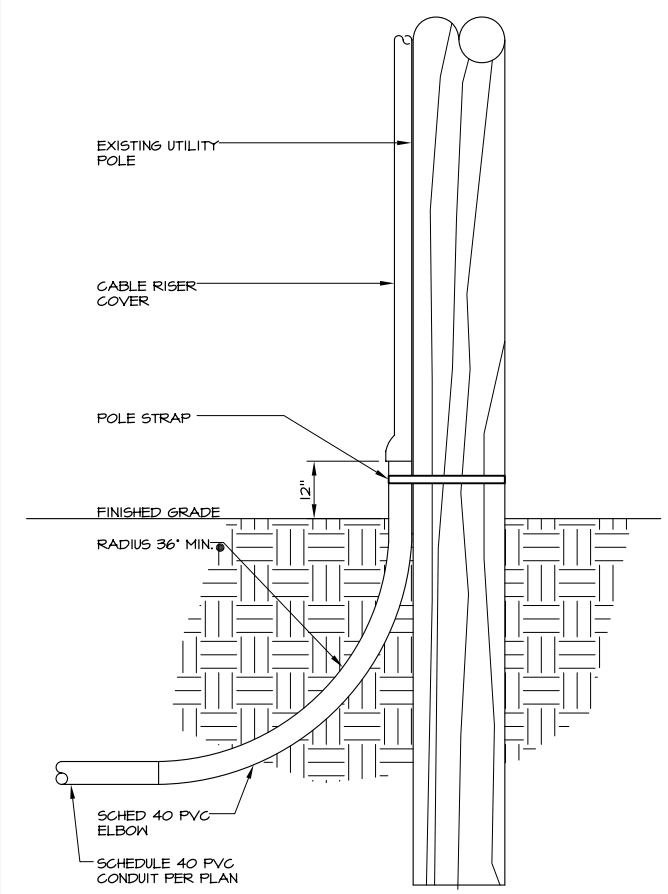

CONDUIT RISER @ UTILITY POLE | 2

UNUSED | -

-

T-Mobile

T-MOBILE WEST CORPORATION, a DELAWARE CORPORATION
SAN FRANCISCO AREA NEW SITE DEVELOPMENT
1855 GATEWAY BLVD., 9TH FLOOR
CONCORD, CA 94520

PROJECT INFORMATION:

SF23283D
SPRINT MONOPOLE
100 ARMORY DRIVE
SAN FRANCISCO, CA 94321

CURRENT ISSUE DATE:
4/22/10

ISSUED FOR:
CD (100%)

REV.:	DATE:	DESCRIPTION:	BY:
1	8/17/09	CD (90%)	JS
2	10/12/09	CD (100%)	JS
3	11/3/09	CD (100%)	JS
4	3/3/10	CD (100%)	JS
5	4/14/10	CD (100%)	JS
6	4/22/10	CD (100%)	JS

PROJECT ARCHITECT/ENGINEER:

DELTA GROUPS ENGINEERING, INC.
CONSULTING ENGINEERS
5635 WEST LAS POSITAS BOULEVARD, SUITE 403
PLEASANTON, CA 94588
OFFICE: (925) 468-0115
FAX: (925) 468-0335
DGE PROJECT NUMBER: P08TK041
DRAWN BY: JS

CONSULTANT:

DRAWN BY:	CHK.:	APV.:
JS	.	.

LICENSER:

SHEET TITLE:
DETAILS

SHEET NUMBER:
A-4

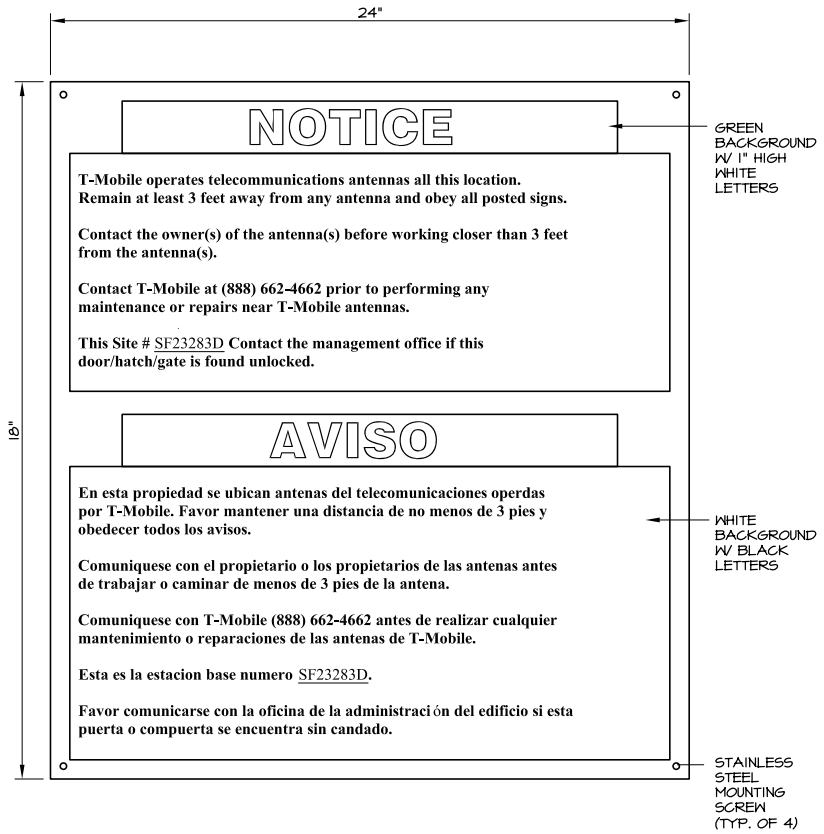

INFORMATION SIGN | 5

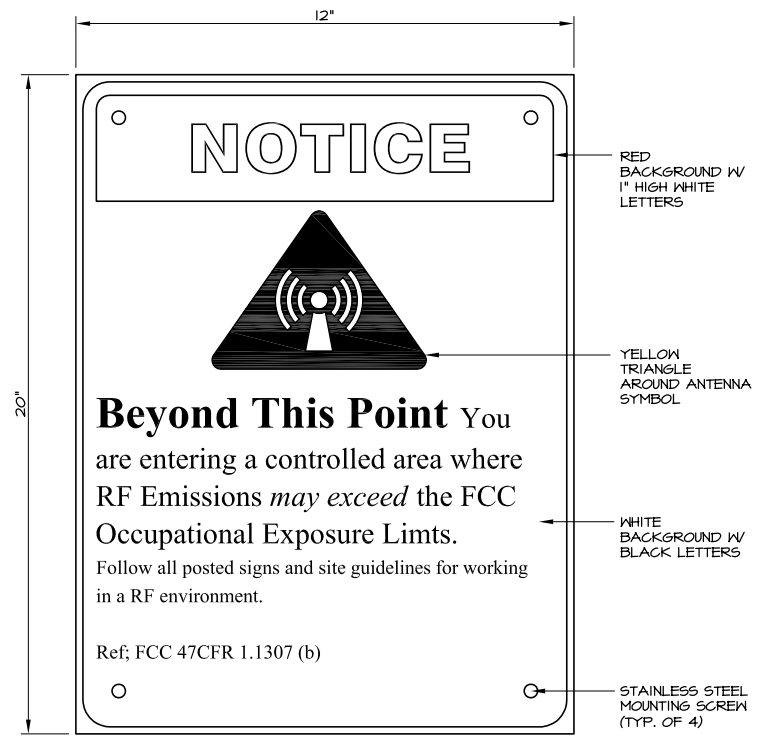

RF NOTICE SIGN | 3

GENERAL SIGNAGE NOTES:

1. SITE IS AN EXISTING FACILITY AND ALL REQUIRED SIGNAGES HAVE BEEN PREVIOUSLY INSTALLED. UPON SITE MODIFICATION, THE CONTRACTOR SHALL VERIFY THE EXISTING SIGNAGES AND SHALL REPLACE ANY SIGNAGES THAT ARE NOT IN ACCORDANCE WITH THE CURRENT SIGNAGE REQUIREMENTS AS SHOWN. IN ADDITION, THE CONTRACTOR SHALL ENSURE THAT ALL REQUIRED SIGNAGES THAT ARE NOT CURRENTLY INSTALLED, SHALL BE INSTALLED ACCORDINGLY.

NOTICE TO WORKERS SIGNAGE:

1. THE SIGNAGE SHALL BE WRITTEN IN ENGLISH, MANDARIN, AND SPANISH (SEE DETAIL 2/A5).

2. THE SIGNAGE SHALL BE PERMANENTLY MOUNTED AT THE STAIRWELL SIDE OF THE ROOF ACCESS STAIRWELL DOOR, IN THE FIRE CONTROL ROOM WITHIN THE PROXIMITY OF THE CELL-SITE SHUTDOWN SIGNAGE AND ANY OTHER SPACE NECESSARY TO WARN WORKERS (IE. PARAPETS, STREET SIDE OF FIRE ESCAPES). THE SIGNAGE SHALL ALSO BE MOUNTED TO THE EXTERIOR OF ANY RF SCREEN AND AT ALL ANTENNA LOCATIONS.

3. THE SIGNAGE SHALL BE CLEARLY LABELED AND VISIBLE FROM ANY DIRECTION OF APPROACH.

4. THE SIGN SHALL BE WEATHERPROOF WITH CONTRASTING BACKGROUND AND LETTERING COLORS AND SHALL BE READABLE FROM AT LEAST FIFTEEN (15) FEET FROM THE SIGN.

5. THE SIGN SHALL HAVE A YELLOW TRIANGLE AROUND THE ANTENNA SYMBOL (SEE ANSI C95.2-1999).

EMERGENCY SHUTDOWN SIGNAGE:

1. THE SIGNAGE SHALL BE PERMANENTLY MOUNTED NEXT TO THE MAIN ELECTRICAL SHUT-OFF, IN THE FCC ROOM WITHIN CLOSE PROXIMITY TO THE FIRE ALARM PANEL, AT THE BATTERY CABINET, AND AT THE EQUIPMENT ROOM.

2. THE SIGN SHALL BE CLEARLY LABELED IN A PHEMOLIC LABEL WITH A WHITE BACKGROUND AND BLACK LETTERING. THE TITLE BLOCK SHALL BE A RED BACKGROUND AND 1" HIGH WHITE LETTERING.

INFORMATION SIGNAGE:

1. THE SIGNAGE SHALL BE PERMANENTLY MOUNTED AT THE STAIRWELL SIDE OF THE ROOF ACCESS STAIRWELL DOOR, IN THE FIRE CONTROL ROOM WITHIN THE PROXIMITY OF THE CELL-SITE SHUTDOWN SIGNAGE AND ANY OTHER SPACE NECESSARY TO WARN WORKERS (IE. PARAPETS, STREET SIDE OF FIRE ESCAPES). THE SIGNAGE SHALL ALSO BE MOUNTED TO THE EXTERIOR OF ANY RF SCREEN AND AT ALL ANTENNA LOCATIONS.

2. THE SIGNAGE SHALL BE CLEARLY LABELED AND VISIBLE FROM ANY DIRECTION OF APPROACH.

3. THE SIGN SHALL BE WEATHERPROOF WITH CONTRASTING BACKGROUND AND LETTERING COLORS AND SHALL BE READABLE FROM AT LEAST FIFTEEN (15) FEET FROM THE SIGN.

RF CAUTION AND RF NOTICE SIGNAGE:

1. THE SIGNAGE SHALL BE PERMANENTLY MOUNTED AT THE STAIRWELL SIDE OF THE ROOF ACCESS STAIRWELL DOOR, IN THE FIRE CONTROL ROOM WITHIN THE PROXIMITY OF THE CELL-SITE SHUTDOWN SIGNAGE AND ANY OTHER SPACE NECESSARY TO WARN WORKERS (IE. PARAPETS, STREET SIDE OF FIRE ESCAPES). THE SIGNAGE SHALL ALSO BE MOUNTED TO THE EXTERIOR OF ANY RF SCREEN AND AT ALL ANTENNA LOCATIONS.

2. THE SIGNAGE SHALL BE CLEARLY LABELED AND VISIBLE FROM ANY DIRECTION OF APPROACH.

3. THE SIGN SHALL BE WEATHERPROOF WITH CONTRASTING BACKGROUND AND LETTERING COLORS AND SHALL BE READABLE FROM AT LEAST FIFTEEN (15) FEET FROM THE SIGN.

SIGNAGE NOTES | 1

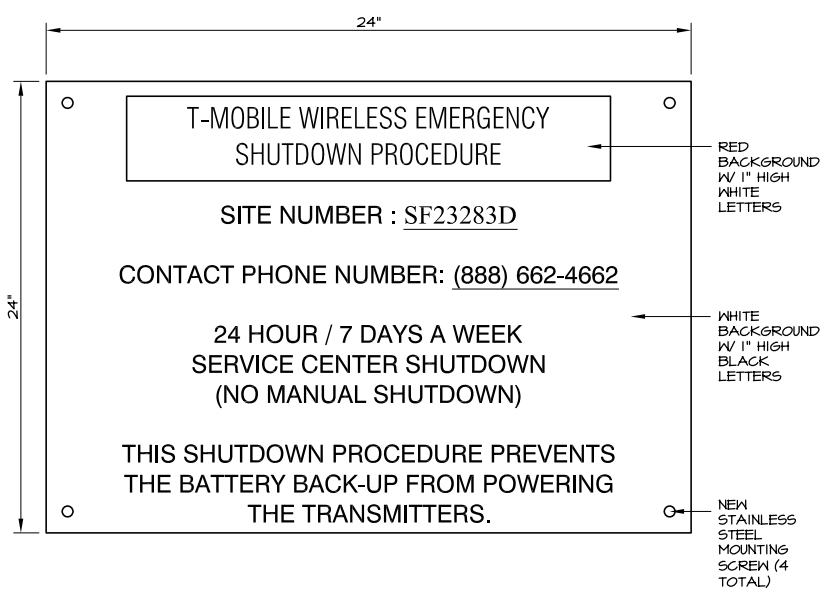

EMERGENCY SHUTDOWN SIGN | 6

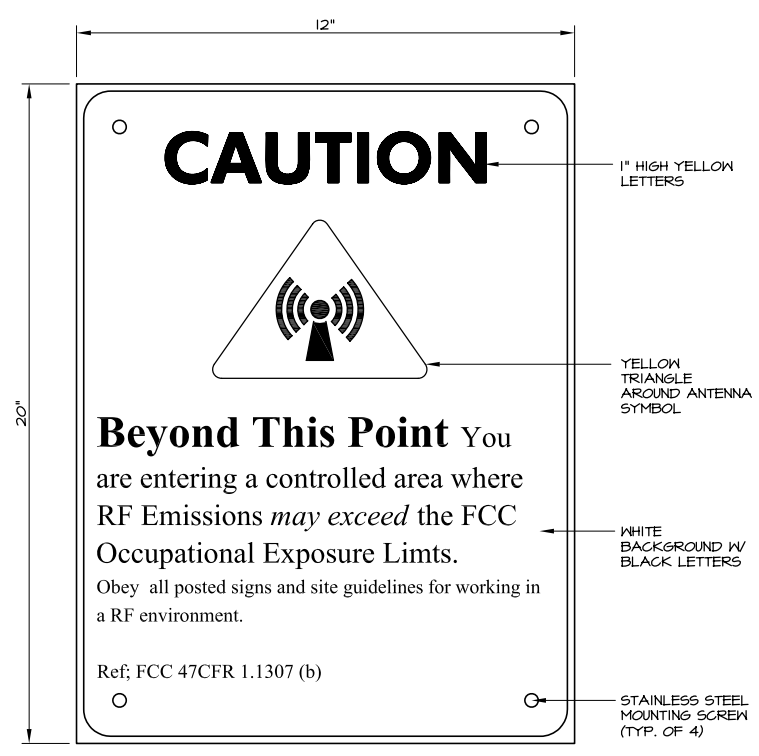

RF CAUTION SIGN | 4

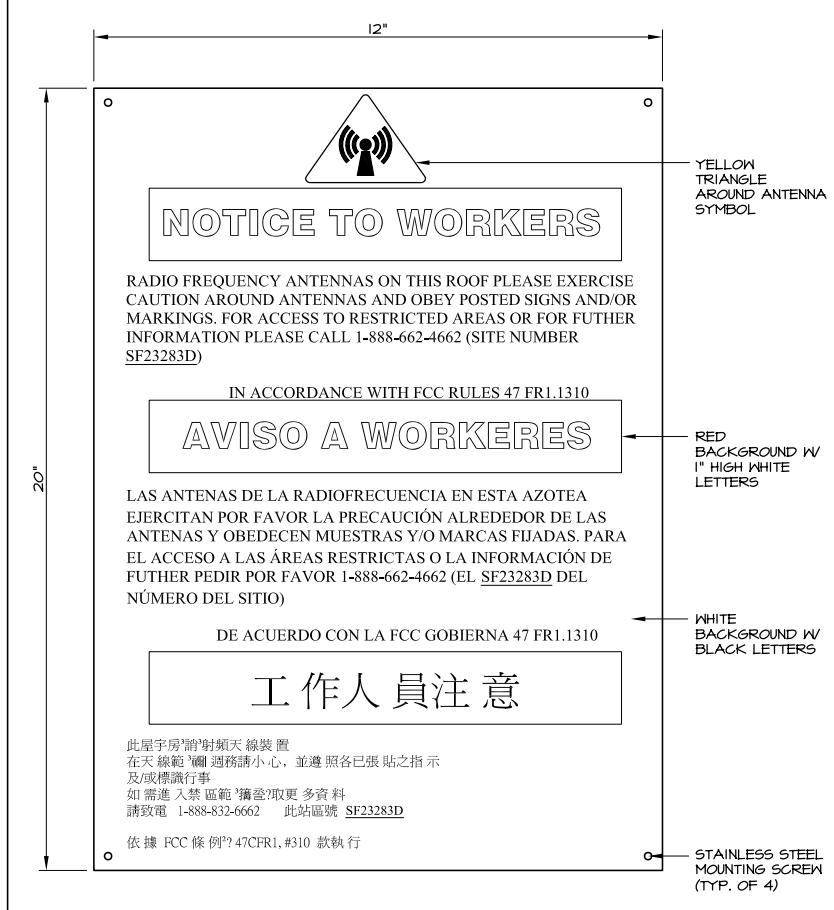

NOTICE TO WORKERS SIGN | 2

T-Mobile

T-MOBILE WEST CORPORATION, a DELAWARE CORPORATION
SAN FRANCISCO AREA NEW SITE DEVELOPMENT
1855 GATEWAY BLVD., 9TH FLOOR
CONCORD, CA 94520

PROJECT INFORMATION:

SF23283D
SPRINT MONOPOLE
100 ARMORY DRIVE
SAN FRANCISCO, CA 94321

CURRENT ISSUE DATE:
4/22/10

ISSUED FOR:
CD (100%)

REV.:	DATE:	DESCRIPTION:	BY:
1	8/17/09	CD (90%)	JS
2	10/12/09	CD (100%)	JS
3	11/3/09	CD (100%)	JS
4	3/3/10	CD (100%)	JS
5	4/14/10	CD (100%)	JS
6	4/22/10	CD (100%)	JS

PROJECT ARCHITECT/ENGINEER:

DELTA GROUPS ENGINEERING, INC.
CONSULTING ENGINEERS
5635 WEST LAS POSITAS BOULEVARD, SUITE 403
PLEASANTON, CA 94588
OFFICE: (925) 468-0115
FAX: (925) 468-0335
DGE PROJECT NUMBER: P08TK041
DRAWN BY: JS

CONSULTANT:

DRAWN BY:	CHK.:	APV.:
JS	.	.

LICENSER:

SHEET TITLE:
SIGNAGE DETAILS

SHEET NUMBER:
A-5

PRELIMINARY*

Product Data Sheet APX16DWV-16DWV-S-E-A20

RFS

Optimizer* Panel Dual Polarized Antenna equipped with (2) AISG 2.0 ACU motors

Product Description

A combination of two X-Polarized antennas in a single radome, this pair of variable tilt antennas provides exceptional suppression of all upper sidelobes at all downtilt angles. It also features a wide downtilt range. This antenna is optimized for performance across the entire AWS frequency band (1710-2155 MHz). The antenna comes pre-connected with two antenna control units (ACU).

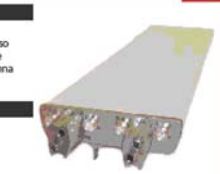

Features/Benefits

- Variable electrical downtilt - provides enhanced precision in controlling intercell interference. The tilt is infield adjustable 0-10 deg.
- High Suppression of all Upper Sidelobes (Typically <-20dB).
- Gain tracking – difference between AWS UL (1710-1755 MHz) and DL (2110-2155 MHz) <1dB.
- Two X-Polarised panels in a single radome.
- Azimuth horizontal beamwidth difference <4deg between AWS UL (1710-1755 MHz) and DL (2110-2155 MHz)
- Low profile for low visual impact.
- Dual polarization; Broadband design.
- Includes (2) AISG 2.0 Compatible ACU-A20-N antenna control units

Technical Specifications

Electrical Specifications

Frequency Range, MHz	1710-2170
Antenna Type	Panel Dual Polarized
Electrical Down Tilt Option	Variable
Gain, dBi (dBd)	16.4 (14.3)
Electrical Downtilt, deg	0-10 , 0-10
Horizontal Beamwidth, deg	65
VSWR	< 1.5:1
Vertical Beamwidth, deg	5.9 to 7.7
1st Upper Sidelobe Suppression, dB	> 18 (typically > 20)
Upper Sidelobe Suppression, dB	> 18 all (typically > 20)
Polarization	Dual pol +/-45°
Front-To-Back Ratio, dB	>26 (typically 28)
Maximum Power Input, W	300
Isolation between Ports, dB	> 30
Lightning Protection	Direct Ground
3rd Order IMP @ 2 x 43 dBm, dBc	> 150 (155 typical)

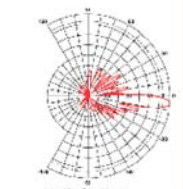

Vertical Pattern

Mechanical Specifications

Rated Wind Speed, km/h (mph)	160 (100)
Survival Wind Speed, km/h (mph)	200 (125)
Max Wind Loading Area, m² (ft²)	0.64 (6.9)
Maximum Thrust @ Rated Wind, N (lbf)	787 (177)
Front Thrust @ Rated Wind, N (lbf)	787 (177)
Reflector Material	Aluminum
Radiating Element Material	Brass
Radome Material	Fiberglass
Connector Type	(4) 7-16 DIN Female
Connector Location	Bottom
Mount Type	Downtilt Kit w/Sensor Kit
Mounting Hardware	ADMM2-2 + ADMM2-L2
Weight w/o Mtg Hardware, kg (lb)	18.5 (40.7)
Packing Dimensions, H/W/D, mm (in)	1550 x 420 x 260 (61 x 16.5 x 10.3)
Overall Length, m (ft)	1.42 (4.6)
Dimensions - H/W/D, mm (in)	1420 x 337 x 80 (55.9 x 13.3 x 3.15)
Shipping Weight, kg (lb)	25 (55)

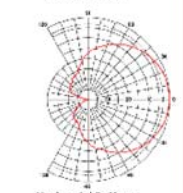

Horizontal Pattern

* This data is provisional and subject to change.

All information contained in the present datasheet is subject to confirmation at time of ordering.

RFS The Clear Choice™ | APX16DWV-16DWV-S-E-A20 | Print Date: 21.2.2007

Please visit us on the internet at http://www.rfsworld.com

Radio Frequency Systems

UNUSED	-	UNUSED	-	PANEL ANTENNA SPECIFICATIONS	1
UNUSED	-	UNUSED	-	UNUSED	-

T-Mobile

T-MOBILE WEST CORPORATION, a DELAWARE CORPORATION
SAN FRANCISCO AREA NEW SITE DEVELOPMENT
1855 GATEWAY BLVD., 9TH FLOOR
CONCORD, CA 94520

PROJECT INFORMATION:

SF23283D
SPRINT MONOPOLE
100 ARMORY DRIVE
SAN FRANCISCO, CA 94321

CURRENT ISSUE DATE:

4/22/10

ISSUED FOR:

CD (100%)

REV.:	DATE:	DESCRIPTION:	BY:
1	8/17/09	CD (90%)	JS
2	10/12/09	CD (100%)	JS
3	11/3/09	CD (100%)	JS
4	3/3/10	CD (100%)	JS
5	4/14/10	CD (100%)	JS
6	4/22/10	CD (100%)	JS

PROJECT ARCHITECT/ENGINEER:

DELTA GROUPS ENGINEERING, INC.
CONSULTING ENGINEERS
5635 WEST LAS POSITAS BOULEVARD,
SUITE 403
PLEASANTON, CA 94588
OFFICE: (925) 468-0115
FAX: (925) 468-0335

DGE PROJECT NUMBER: P08TK041
DRAWN BY: JS

CONSULTANT:

DRAWN BY:	CHK.:	APV.:
JS	.	.

LICENSER:

SHEET TITLE:

ANTENNA SPECIFICATIONS

SHEET NUMBER:

A-6

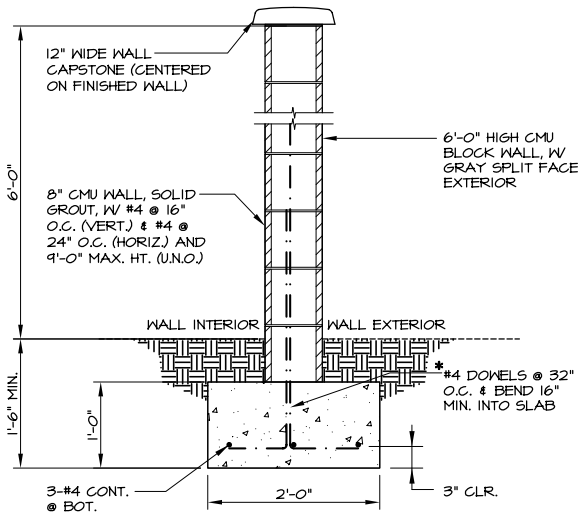

CMU WALL DETAIL | 6

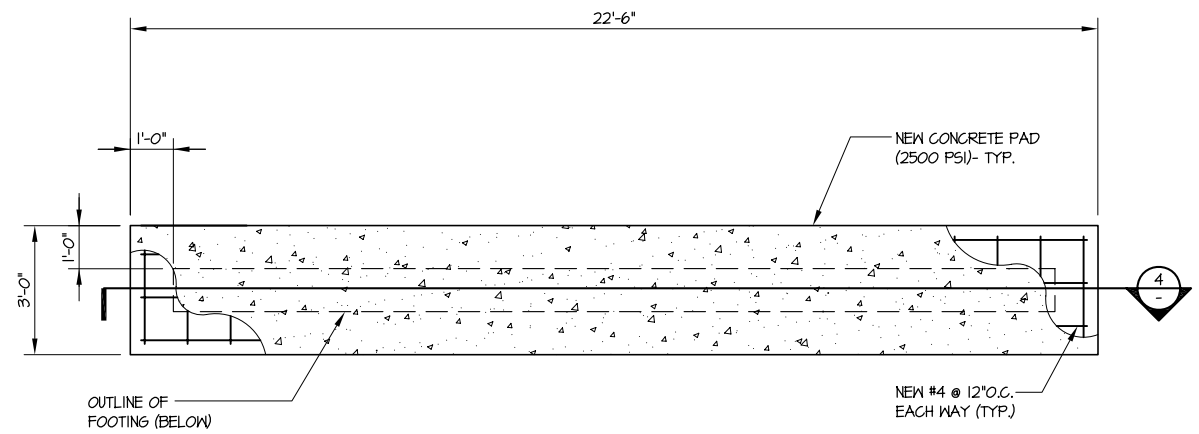

FOUNDATION PLAN | SCALE: 1/2 inch = 1 ft | 2' 0' 2' 4' | 3

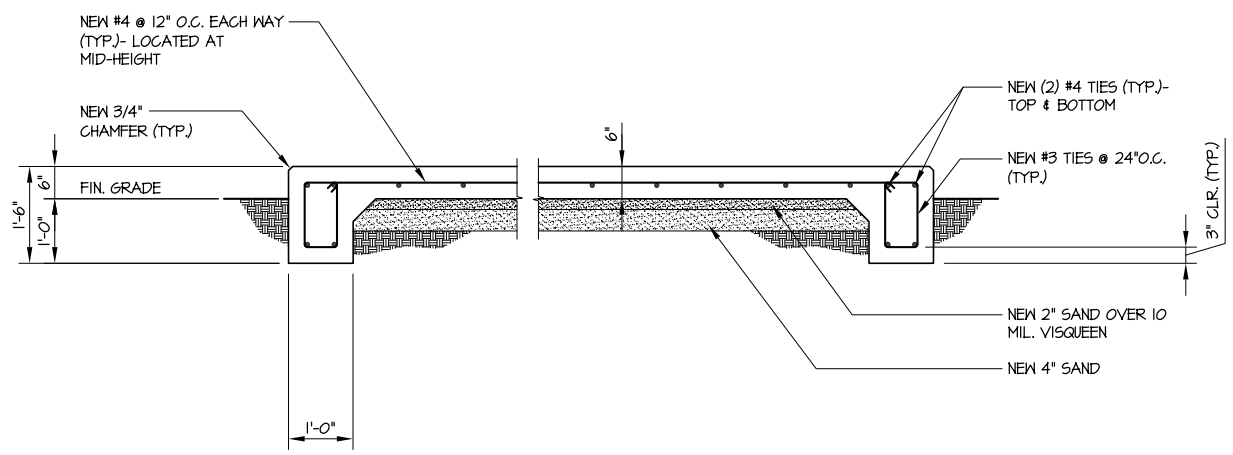

UNUSED | -

FOUNDATION SECTION | SCALE: 3/4 inch = 1 ft | 1' 0' 1' 2' 3' | 4

GENERAL NOTES

1. THE CONTRACTOR SHALL EXAMINE THE STRUCTURAL DRAWINGS AND SHALL NOTIFY THE ARCHITECT/ENGINEER, AND PROJECT MANAGER, IN WRITING, SHOULD ANY DISCREPENCIES BE FOUND PRIOR TO PROCEEDING WITH WORK.

2. THE DRAWINGS AND SPECIFICATIONS REPRESENT THE COMPLETE STRUCTURE. THEY DO NOT INDICATE THE METHOD OF CONSTRUCTION. THE CONTRACTOR SHALL PROVIDE ALL MEASURES AND MEANS NECESSARY TO PROTECT PERSONS AND THE EXISTING STRUCTURE DURING CONSTRUCTION. SUCH MEASURES SHALL INCLUDE BUT NOT BE LIMITED TO BRACING, SHORING, ETC. VISITS BY THE ARCHITECT SHALL NOT INCLUDE INSPECTION OF THESE ITEMS.

3. ALL WORK NOT DETAILED OR NOTED SHALL BE CONSTRUCTED IN ACCORDANCE WITH OTHER SIMILAR WORK AND TYPICAL DETAILS SHOWN ON THE DRAWINGS. DIMENSIONS SHALL TAKE PRECEDENCE OVER GENERAL NOTES AND TYPICAL DETAILS. NO PIPES OR DUCTS SHALL BE PLACED IN SLABS OR WALLS UNLESS SPECIFICALLY DETAILED OR APPROVED BY THE ARCHITECT.

4. ALL WORK PERFORMED ON PROJECT AND MATERIALS INSTALLED SHALL BE IN STRICT ACCORDANCE WITH ALL APPLICABLE CODES, REGULATIONS, AND ORDINANCES INCLUDING OSHA AND STATE SAFETY ORDERS. THE GENERAL CONTRACTOR SHALL GIVE ALL NOTICES AND COMPLY WITH ALL LAWS, ORDINANCES, RULES, REGULATIONS AND LAWFUL ORDERS OF ANY PUBLIC AUTHORITY, MUNICIPAL, AND UTILITY COMPANY SPECIFICATIONS, AND LOCAL AND STATE JURISDICTIONAL CODES BEARING ON THE PERFORMANCE OF THE WORK.

FOUNDATION NOTES & SPECIFICATIONS

1. ALLOWABLE SOILS BEARING VALUE 1000 PSF. EXPANSION INDEX UNKNOWN.

2. PRIOR TO THE CONTRACTOR REQUESTING A BUILDING DEPARTMENT FOUNDATION INSPECTION, THE CONTRACTOR SHALL ADVISE THE PROJECT MANAGER IN WRITING THAT:

A. THE EQUIPMENT PAD WAS PREPARED IN ACCORDANCE WITH THE LOCAL CITY STANDARDS.

B. THE UTILITY TRENCHES HAVE BEEN PROPERLY BACKFILLED AND COMPACTED.

C. THE FOUNDATION EXCAVATION, FORMING AND REINFORCEMENT COMPLY WITH THE APPROVED PLAN.

3. THE CONTRACTOR SHALL COORDINATE THE LOCATIONS OF ALL EMBEDDED ITEMS WITH THE EQUIPMENT AND ELECTRICAL PLANS, AND SHALL VERIFY LOCATION OF ANY UNDERSLAB CONDUIT PRIOR TO POURING CONCRETE, AND SHALL NOTIFY THE PROJECT MANGER, IN WRITING, IF DISCREPANCIES ARE FOUND.

4. REBAR REINFORCEMENT IN SLAB SHALL BE SUPPORTED ON CHAIRS AT 27" O.C. EACH WAY TO ENSURE REINFORCEMENT IS CENTERED IN SLAB.

5. FOOTING DIMENSIONS SHOWN ON THE DETAILS ARE MINIMUM AND MUST BE INCREASED AND/OR STEPPED BY THE CONTRACTOR WHERE REQUIRED BY SPECIFIC FIELD CONDITIONS AND AS REQUIRED BY THE SOILS ENGINEER. THE CONTRACTOR SHALL NOTIFY THE ARCHITECT IN WRITING WHEN AND WHERE SUCH INCREASES OCCUR.

6. SLOPE FINISHED GRADE AWAY FROM ALL FOOTINGS, SLABS AND OTHER STRUCTURES, MINIMUM 1/4" PER FOOT.

7. CURB SURFACE SHALL BE LEVEL. APRON WORK AREA SHALL SLOPE MINIMUM 1% DOWN AND AWAY FROM EQUIPMENT CURB.

8. ALL CONDUIT STUBBED THROUGH PAD (EXCEPT TELCO GROUND) SHALL BE FLUSH WITH SURFACE OF PAD.

9. THIS SITE REQUIRES PREPARATION THAT INCLUDES BUT IS NOT LIMITED TO REMOVAL OF VEGETATION AND DELETERIOUS MATERIAL.

10. FOOTING TO EXTEND A MINIMUM OF 30" BELOW UNDISTURBED SOIL AND FROST LINE.

11. FOUNDATION SHALL BE IN ACCORDANCE WITH SECTION 1806.1 OF THE UBC.

MATERIAL SPECIFICATIONS

CONCRETE SLAB: 2500 PSI OR BETTER
CONCRETE BLOCK: GRADE A, ASTM C-90 (f'm= 1500 PSI)
REINFORCING BAR: GRADE 60 OR BETTER (fy = 60,000 PSI)

UNUSED | -

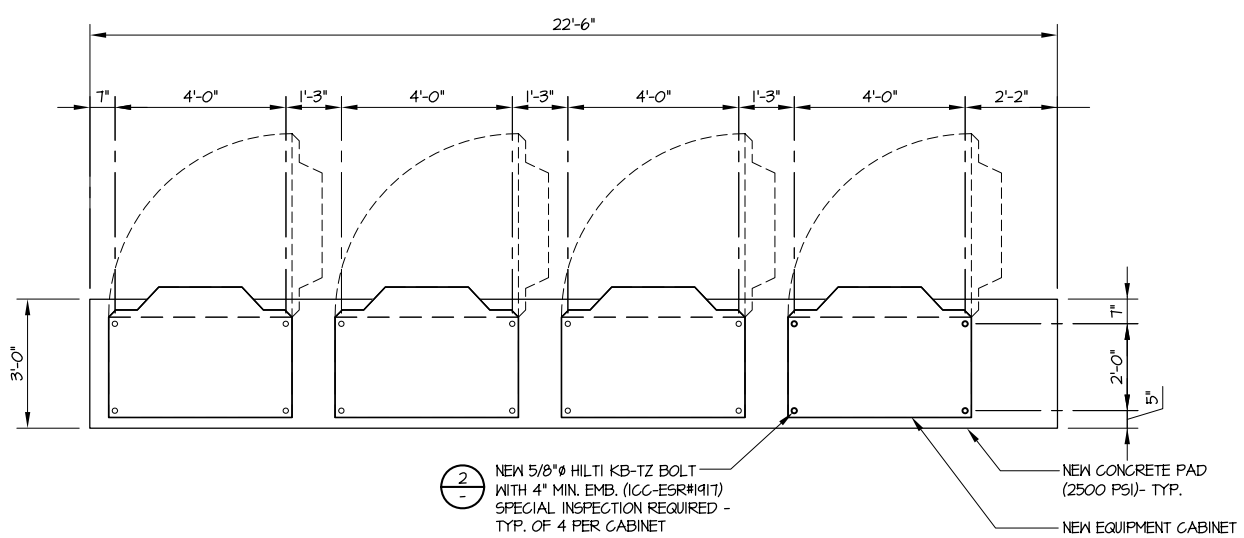

EQUIPMENT BOLT HOLE LOCATION | SCALE: 1/2 inch = 1 ft | 2' 0' 2' 4' | 5

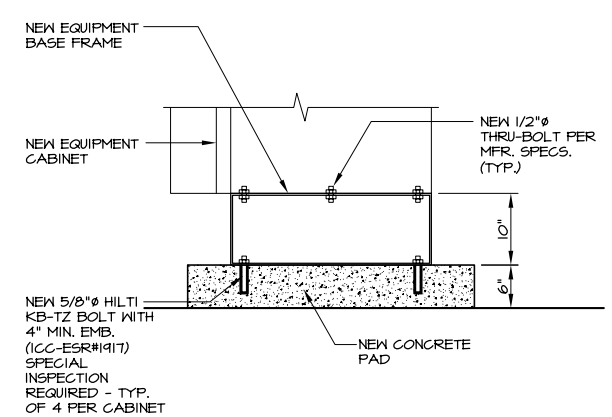

EQUIPMENT ANCHORAGE | 2

GENERAL STRUCTURAL NOTES | 1

T-Mobile

T-MOBILE WEST CORPORATION, a DELAWARE CORPORATION
SAN FRANCISCO AREA NEW SITE DEVELOPMENT
1855 GATEWAY BLVD., 9TH FLOOR
CONCORD, CA 94520

PROJECT INFORMATION:

SF23283D
SPRINT MONOPOLE
100 ARMORY DRIVE
SAN FRANCISCO, CA 94321

CURRENT ISSUE DATE:
4/22/10

ISSUED FOR:
CD (100%)

REV.:	DATE:	DESCRIPTION:	BY:
1	8/17/09	CD (90%)	JS
2	10/12/09	CD (100%)	JS
3	11/3/09	CD (100%)	JS
4	3/3/10	CD (100%)	JS
5	4/14/10	CD (100%)	JS
6	4/22/10	CD (100%)	JS

PROJECT ARCHITECT/ENGINEER:

DELTA GROUPS ENGINEERING, INC.
CONSULTING ENGINEERS
5635 WEST LAS POSITAS BOULEVARD, SUITE 403
PLEASANTON, CA 94588
OFFICE: (925) 468-0115
FAX: (925) 468-0335

DGE PROJECT NUMBER: P08TK041
DRAWN BY: JS

CONSULTANT:

DRAWN BY:	CHK.:	APV.:
JS	.	.

LICENSER:

SHEET TITLE:
STRUCTURAL NOTES & DETAILS

SHEET NUMBER:
S-1

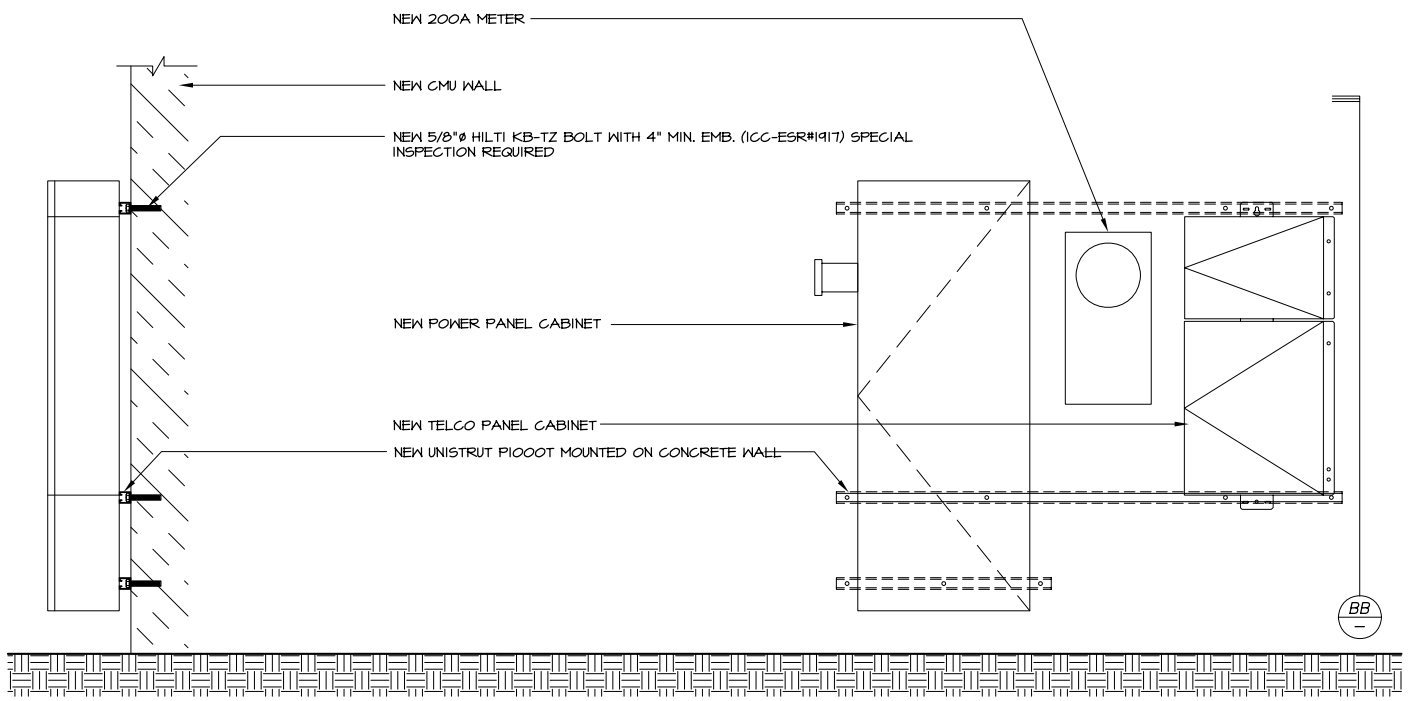

SECTION BB

FRONT VIEW

UTILITIES RACK DETAIL | 2

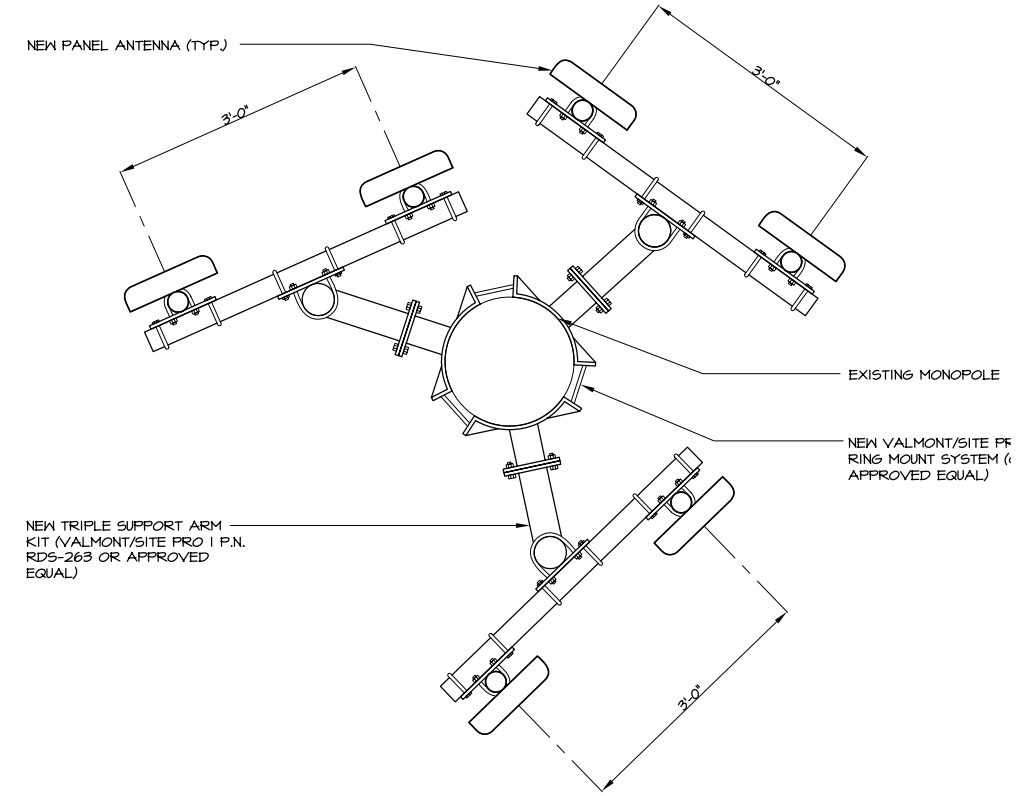

PLAN

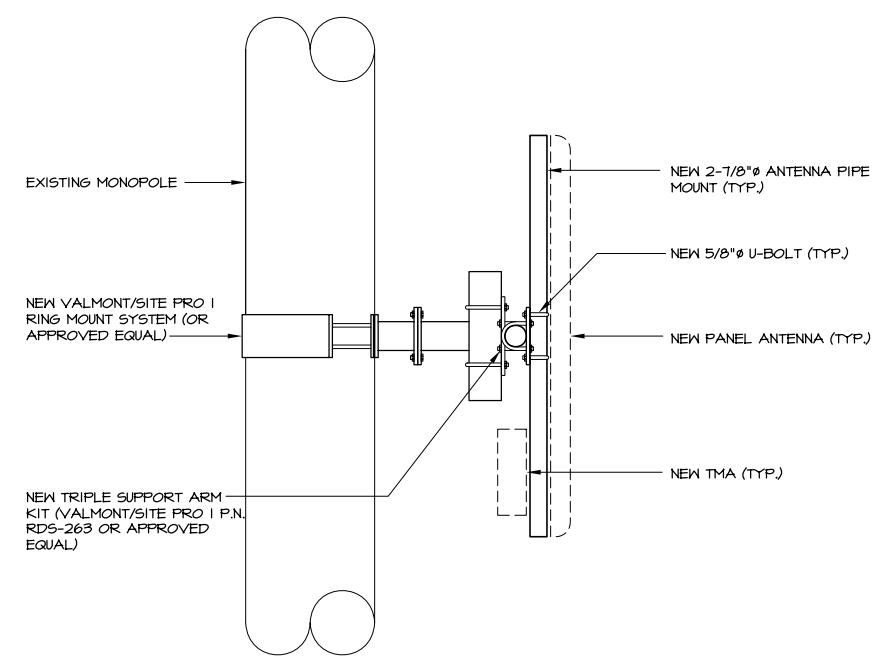

ELEVATION

UNUSED	-	UNUSED	-	ANTENNA MOUNTING DETAILS	1

T Mobile

T-MOBILE WEST CORPORATION, a DELAWARE CORPORATION
SAN FRANCISCO AREA NEW SITE DEVELOPMENT
1855 GATEWAY BLVD., 9TH FLOOR
CONCORD, CA 94520

PROJECT INFORMATION:

SF23283D
SPRINT MONOPOLE
100 ARMORY DRIVE
SAN FRANCISCO, CA 94321

CURRENT ISSUE DATE:

4/22/10

ISSUED FOR:

CD (100%)

REV.:	DATE:	DESCRIPTION:	BY:
1	8/17/09	CD (90%)	JS
2	10/12/09	CD (100%)	JS
3	11/3/09	CD (100%)	JS
4	3/3/10	CD (100%)	JS
5	4/14/10	CD (100%)	JS
6	4/22/10	CD (100%)	JS

PROJECT ARCHITECT/ENGINEER:

TA GROUPS ENGINEERING, INC.
CONSULTING ENGINEERS
5635 WEST LAS POSITAS BOULEVARD,
SUITE 403
PLEASANTON, CA 94588
OFFICE: (925) 468-0115
FAX: (925) 468-0335

DGE PROJECT NUMBER: P08TK041
DRAWN BY: JS

CONSULTANT:

DRAWN BY:	CHK.:	APV.:
JS	.	.

LICENSER:

SHEET TITLE:

STRUCTURAL DETAILS

SHEET NUMBER:

S-2

1. ALL WORK AND MATERIAL SHALL BE IN COMPLETE COMPLIANCE WITH THE LATEST EDITION OF THE N.E.C. AND ALL REGULATIONS, LAWS, SAFETY ORDERS, ORDINANCES OR CODES. IN THE EVENT OF CONFLICT, THE MOST RESTRICTIVE CODE SHALL PREVAIL.

2. THE SEISMIC BRACING AND ANCHORAGE OF ELECTRICAL CONDUITS AND WIREWAYS SHALL BE IN ACCORDANCE WITH THE UNIFORM BUILDING CODE, CHAPTER 23 AND "GUIDELINE FOR SEISMIC RESTRAINTS OF MECHANICAL SYSTEMS AND PLUMBING PIPING SYSTEMS," PUBLISHED BY SMACNA AND PPIC, OR THE SUPERSTRUT-SEISMIC RESTRAINTS SYSTEM, OR THE KIN-LINE SEISMIC RESTRAINT SYSTEM.

3. ALL ELECTRICAL MATERIALS AND EQUIPMENT SHALL BE NEW AND SHALL BE LISTED BY UNDERWRITER'S LABORATORIES (UL) AND BEAR THEIR LABEL, OR LISTED AND CERTIFIED BY A NATIONALLY RECOGNIZED TESTING AUTHORITY WHERE (UL) DOES NOT HAVE LISTING. CUSTOM MADE EQUIPMENT SHALL HAVE COMPLETE TEST DATA SUBMITTED BY THE MANUFACTURE ATTESTING TO ITS SAFETY. IN ADDITION, THE MATERIALS, EQUIPMENT, AND INSTALLATION SHALL COMPLY WITH THE LATEST EDITION OF THE FOLLOWING CODES AND REGULATIONS:

AMERICAN SOCIETY OF TESTING MATERIALS (ASTM)
INSTITUTE OF ELECTRICAL AND ELECTRONIC ENGINEERS (IEEE)
NATIONAL ELECTRICAL MANUFACTURERS ASSOCIATION (NEMA)
AMERICAN STANDARD ASSOCIATION (ASA)
NATIONAL FIRE PROTECTION AGENCY (NFPA)
AMERICAN NATIONAL STANDARD INSTITUTE (ANSI)
NATIONAL ELECTRICAL CODE (NEC)
CALIFORNIA CODE OF REGULATIONS TITLE 24 (CCR)
INSULATED POWER CABLE ENGINEERS ASSOCIATION (IPCEA)
ALL LOCAL CODES HAVING JURISDICTION

4. THE CONTRACTOR SHALL VISIT THE SITE, INCLUDING ALL AREAS INDICATED ON THE DRAWINGS, AND SHALL THOROUGHLY FAMILIARIZE HIMSELF WITH THE EXISTING CONDITIONS AS WELL AS THE ELECTRICAL AND GROUNDING REQUIREMENTS OF THIS PROJECT. BY SUBMITTING A BID, HE ACCEPTS THE CONDITIONS UNDER WHICH HE SHALL BE REQUIRED TO PERFORM HIS WORK.

5. IT SHALL BE THE CONTRACTORS RESPONSIBILITY TO OBTAIN A COMPLETE SET OF CONTRACT DOCUMENTS, ADDENDA, DRAWINGS AND SPECIFICATIONS AS WELL AS THE LATEST EDITION OF ANY DESIGN SPECIFICATIONS. HE SHALL CHECK THE DRAWINGS OF THE OTHER TRADES AND SHALL CAREFULLY READ THE ENTIRE SPECIFICATIONS AND DETERMINE HIS RESPONSIBILITIES. FAILURE TO DO SO SHALL NOT RELEASE THE CONTRACTOR FROM THE RESPONSIBILITY OF DOING THE WORK IN COMPLETE ACCORDANCE WITH THE DRAWINGS AND SPECIFICATIONS.

6. THE CONTRACTOR SHALL COORDINATE HIS WORK WITH OTHER TRADES AT THE SITE. ANY COSTS TO INSTALL WORK TO ACCOMPLISH SAID COORDINATION WHICH DIFFERS FROM THE WORK AS SHOWN ON THE DRAWINGS SHALL BE INCURRED BY THE CONTRACTOR. ANY DISCREPANCIES, AMBIGUITIES OR CONFLICTS SHALL BE BROUGHT TO THE ATTENTION OF THE PROJECT MANAGER AND THE ARCHITECT/ENGINEER IN WRITING PRIOR TO SUBMITTING A BID. ANY SUCH CONFLICTS NOT CLARIFIED PRIOR TO BID SHALL SUBJECT TO THE INTERPRETATION OF THE PROJECT MANAGER AT NO ADDITIONAL COST.

7. THE CONTRACTOR SHALL OBTAIN AND KEEP UP-TO-DATE A COMPLETE RECORD SET OF DRAWINGS. UPON COMPLETION OF THE WORK, A SET OF REPRODUCIBLE CONTRACT DRAWINGS SHALL BE OBTAINED FROM THE PROJECT MANAGER, AND ALL CHANGES AS NOTED ON THE RECORD SET OF DRAWINGS SHALL BE INCORPORATED THEREON BY THE CONTRACTOR WITH RED INK IN A NEAT, LEGIBLE, UNDERSTANDABLE AND PROFESSIONAL MANNER.

8. ALL INTERRUPTION OF ELECTRICAL POWER SHALL BE KEPT TO A MINIMUM. HOWEVER, WHEN AN INTERRUPTION IS NECESSARY, THE SHUTDOWN MUST BE COORDINATED WITH THE PROJECT MANAGER AND THE PROPERTY OWNER 14 DAYS PRIOR TO THE OUTAGE. ANY OVERTIME PAY SHALL BE INCLUDED IN THE CONTRACTOR'S BID. WORK IN EXISTING SWITCHBOARDS OR PANELBOARDS SHALL BE COORDINATED WITH THE PROJECT MANAGER AND THE BUILDING OWNER PRIOR TO REMOVING ACCESS PANELS OR DOORS.

9. SHOP DRAWINGS SHALL BE SUBMITTED FOR ITEMS INDICATED ON PLANS. SHOP DRAWINGS SHALL INCLUDE ALL DATA WITH CAPACITIES, SIZES, DIMENSIONS, CATALOG NUMBERS AND MANUFACTURER'S BROCHURES.

10. AFTER ALL REQUIREMENTS OF THE SPECIFICATIONS AND THE DRAWINGS HAVE BEEN FULLY COMPLETED, THE PROJECT MANAGER WILL INSPECT THE WORK. THE CONTRACTOR SHALL PROVIDE COMPETENT PERSONNEL TO DEMONSTRATE THE OPERATION OF ANY ITEM OR SYSTEM TO THE FULL SATISFACTION OF THOSE REPRESENTATIVES. FINAL ACCEPTANCE OF THE WORK WILL BE MADE BY THE PROJECT MANAGER AFTER RECEIPT OF APPROVAL AND RECOMMENDATION OF ACCEPTANCE FROM EACH REPRESENTATIVE.

11. THE CONTRACTOR SHALL FURNISH ONE YEAR WRITTEN GUARANTEE OF MATERIALS AND WORKMANSHIP FROM THE DATE OF SUBSTANTIAL COMPLETION.

12. COORDINATE WITH OTHER TRADES AS TO THE EXACT LOCATION OF THEIR RESPECTIVE EQUIPMENT. SUPPLY POWER AND MAKE CONNECTION TO EQUIPMENT REQUIRING ELECTRICAL CONNECTIONS. REVIEW THE DRAWINGS OF OTHER TRADES AND LOCATION OF EQUIPMENT.

13. EXACT METHOD AND LOCATION OF CONDUIT PENETRATIONS AND OPENINGS IN CONCRETE WALLS OR FLOORS OR STRUCTURAL STEEL MEMBERS, SHALL BE DIRECTED BY THE STRUCTURAL ENGINEER. PERFORM CORING, SAWCUTTING, PATCHING, AND REFINISHING OF EXISTING WALLS AND SURFACES WHEREVER IT IS NECESSARY TO PENETRATE. OPENINGS SHALL BE SEALED IN AN APPROVED METHOD TO MEET THE FIRE RATING OF THE PARTICULAR WALL, FLOOR, OR CEILING.

14. UTILITY PENETRATIONS OF ANY KIND IN FIRE AND SMOKE PARTITIONS AND CEILING ASSEMBLIES, SHALL BE FIRESTOPPED AND SEALED WITH AN APPROVED MATERIAL SECURELY INSTALLED.

15. CONNECTIONS TO VIBRATING EQUIPMENT AND SEISMIC SEPARATIONS:

LIQUID-TIGHT FLEXIBLE STEEL CONDUIT IN DRY INTERIOR LOCATIONS AND IN AREAS EXPOSED TO WEATHER, DAMP LOCATIONS, CONNECTIONS TO TRANSFORMER ENCLOSURES, AND FINAL CONNECTIONS TO MOTORS.

PROVIDE A SEPARATE INSULATED GROUNDING CONDUCTOR IN FLEXIBLE CONDUIT RUNS. MAXIMUM LENGTH SHALL BE SIX FEET UNLESS OTHERWISE NOTED.

16. ROUTE EXPOSED AND CONCEALED CONDUIT PARALLEL AND PERPENDICULAR TO WALL AND ADJACENT PIPING. ARRANGE CONDUIT TO MAINTAIN HEADROOM AND TO PRESENT A NEAT APPEARANCE.

17. THE CONTRACTOR SHALL BE RESPONSIBLE FOR ALL SAWCUTTING, TRENCHING, BACKFILLING, COMPACTING AND PATCHING OF CONCRETE AND ASPHALT AS REQUIRED TO PERFORM HIS WORK. ATTENTION IS CALLED TO THE FACT THAT THERE ARE EXISTING UNDERGROUND UTILITY LINES. THE CONTRACTOR IS RESPONSIBLE FOR NOTIFICATION AND COORDINATION WITH ALL PROPERTY OWNERS, UTILITIES, AND APPROPRIATE "DIG ALERT" UNDERGROUND MARKING AGENCIES AND COMPANIES. THE CONTRACTOR SHALL ALWAYS USE EXTREME CAUTION WHEN TRENCHING FOR HIS WORK. THE CONTRACTOR SHALL BE RESPONSIBLE FOR THE PROPER AND APPROVED REPAIR OF ANY AND ALL DAMAGES CAUSED DURING THE COURSE OF HIS WORK.

18. WHENEVER A DISCREPANCY IN QUANTITY OR SIZE OF CONDUIT, WIRE, EQUIPMENT DEVICES, CIRCUIT BREAKERS, GROUND FAULT PROTECTION SYSTEMS, ETC. (ALL MATERIALS), ARISES ON THE DRAWINGS OR SPECIFICATIONS, THE CONTRACTOR SHALL BE RESPONSIBLE FOR PROVIDING AND INSTALLING ALL MATERIAL AND SERVICES REQUIRED BY STRICTEST CONDITIONS NOTED ON THE DRAWINGS OR IN THE SPECIFICATIONS TO ENSURE COMPLETE AND OPERABLE SYSTEMS AS REQUIRED BY THE PROJECT MANAGER AND THE ARCHITECT/ENGINEER.

19. STRAIGHT FEEDER, BRANCH CIRCUIT, AND CONDUIT RUNS SHALL BE PROVIDED WITH SUFFICIENT WEATHER PROOF PULL BOXES OR JUNCTION BOXES TO LIMIT THE MAXIMUM LENGTH OF ANY SINGLE CABLE PULL TO 100 FEET. PULL BOXES SHALL BE SIZED PER CODE OR PER THE LATEST EDITION OF THE DESIGN SPECIFICATIONS, WHICHEVER IS MOST RESTRICTIVE. LOCATIONS SHALL BE DETERMINED IN THE FIELD OR AS INDICATED ON THE DRAWINGS.

20. MAXIMUM NUMBER OF CONDUCTORS IN OUTLET SHALL BE DETERMINED IN THE FIELD OR AS INDICATED ON THE DRAWINGS.

21. IDENTIFICATION NAME PLATES SHALL BE MICARTA 1/8 INCH THICK AND OF APPROVED SIZE WITH BEVELLED EDGES AND ENGRAVED WHITE LETTERS A MINIMUM OF 1/4 INCH HIGH ON BLACK BACKGROUND. NAMEPLATES SHALL BE PROVIDED ALL CIRCUITS IN THE SERVICE DISTRIBUTION AND POWER DISTRIBUTION SWITCH BOARDS OR PANEL BOARDS, DISCONNECTING SWITCHES, TRANSFORMERS, TERMINAL CABINETS, TELEPHONE CABINETS, ETC. ALL NAMEPLATES SHALL BE ATTACHED WITH SCREWS. PULL BOXES, JUNCTION BOXES, AND DEVICE BOXES SHALL BE MARKED WITH A PERMANENT MARKER.

22. THE EXACT LOCATION OF ALL ELECTRICAL DEVICES AND EQUIPMENT SHALL BE COORDINATED WITH THE PLANS AND DETAILS, PRIOR TO INSTALLATION.

23. DRAWINGS ARE DIAGRAMMATIC ONLY. ROUTING OF RACEWAYS SHALL BE AT THE OPTION OF THE CONTRACTOR UNLESS OTHERWISE NOTED ON THE ELECTRICAL DRAWINGS FOR LOCATIONS OF ANY ELECTRICAL, ARCHITECTURAL, STRUCTURAL, CIVIL, OR MECHANICAL ITEMS OR FEATURES.

24. RIGID GALVANIZED STEEL CONDUIT SHALL BE FULL WEIGHT THREADED TYPE. ELECTRICAL METALLIC TUBING (EMT) MAY BE USED IN WALLS OR CEILING SPACES WHERE NOT SUBJECT TO MECHANICAL DAMAGE. DIRECT BURIED PVC SCHEDULE 40 MAY BE INSTALLED BENEATH SLAB OR BELOW GRADE AND SHALL BE CONCRETE ENCASED UNLESS NOTED OTHERWISE. AN EQUIPMENT GROUNDING CONDUCTOR SHALL BE PROVIDED IN ALL CONDUIT RUNS. PROVIDE CONDUIT SUPPORTS NOT TO EXCEED 8'-0". PROVIDE 3-PG CONNECTORS FOR SECONDARY GROWTH PATH OF SURFACE MOUNTED EMT.

25. RIGID STEEL CONDUIT FITTINGS INCLUDING COUPLINGS, LOCKOUTS, NIPPLES, ETC. SHALL BE THREADED AND THOROUGHLY GALVANIZED EXCEPT WHERE AN ADAPTER IS NEEDED TO CONNECT TO PVC. ELECTRICAL METALLIC TUBING (EMT) CONDUIT FITTINGS SHALL BE STEEL, RAINTIGHT THREADLESS COMPRESSION TYPE. DIE CAST, SET SCREW, OR INDENTED TYPES ARE NOT ACCEPTABLE. SET SCREW TYPE IS NOT ACCEPTABLE.

26. ALL TELCO CONDUIT INSTALLATIONS AND OTHER EMPTY CONDUIT RUNS AND STUBS SHALL INCLUDE A YELLOW 3/8" POLYPROPYLENE PULL STRING.

27. ALL CONDUCTORS SHALL BE COPPER #12 AWG MINIMUM SIZE, TYPE THHN/THWN THERMOPLASTIC, 600 VOLT, 75 DEGREES CELSIUS WET AND 90 DEGREES CELSIUS DRY AND UL LISTED UNLESS NOTED OTHERWISE. CONDUCTORS #10 AWG AND SMALLER SHALL BE SOLID. CONDUCTORS #8 AWG AND LARGER SHALL BE STRANDED. UNLESS SPECIFICALLY NOTED TO THE CONTRARY. ALL WIRE CONNECTORS SHALL BE CRIMP COMPRESSION TYPE BY "THOMAS AND BETT" OR APPROVED EQUIVALENT, INSTALLED AND INSULATED PER THE MANUFACTURER'S RECOMMENDATIONS. ALL WIRE ENDS SHALL BE MARKED FOR EASY IDENTIFICATION AND TRACING.

28. JUNCTION AND PULL BOXES: FOR INTERIOR DRY LOCATIONS, BOXES SHALL BE GALVANIZED ONE-PIECE, DRAWN STEEL, KNOCKOUT TYPE WITH REMOVABLE MACHINE SCREW SECURED COVERS. FOR OUTSIDE, DAMP, OR SURFACE LOCATIONS, BOXES SHALL BE HEAVY CAST ALUMINUM OR CAST IRON WITH REMOVABLE, GASKETS, NON-FERROUS MACHINE SCREW SECURED COVERS. BOXES SHALL BE SIZED FOR THE NUMBER AND SIZES OF CONDUCTORS AND CONDUIT ENTERING THE BOX AND EQUIPPED WITH PLASTER EXTENSION RINGS WHERE REQUIRED. BOXES SHALL BE LABELED TO INDICATE PANEL AND CIRCUIT NUMBER, OR TYPE OF SIGNAL OR COMMUNICATIONS SYSTEM.

29. ALL OUTDOOR ELECTRICAL DEVICES OR EQUIPMENT SHALL BE OF WEATHERPROOF TYPE.

30. ALL EQUIPMENT, MONOPOLE, FRAME, CABLE TRAY AND ANTENNA GROUND WIRE CONNECTIONS TO GROUND BUSSES SHALL BE MADE WITH CRIMP TYPE COMPRESSION CONNECTIONS TO CONNECTORS (MINIMUM 2 HOLE LUGS WITH FULL BOLTING). BUSS SHALL BE PRE-DRILLED TO ACCOMMODATE ALL CONNECTORS.

31. ALL GROUNDING SHALL BE PER N.E.C. SECTION 250 AND 810 AND THE GROUNDING REQUIREMENTS OF THESE DRAWINGS.

32. ALL GROUND WIRE CONNECTIONS BETWEEN GROUND BUSSES AND OTHER GROUND BUSSES AND GROUND RODS SHALL BE CADWELDED.

33. ALL METALLIC GROUND WIRE CONDUIT SHALL BE GROUNDED TO THE GROUND WIRE USING SET SCREW CONNECTIONS AT CONDUIT END CAPS AND CRIMP CONNECTIONS AT WIRE.

34. COAT ALL BOLTED LUG & BUSS GROUND CONTACT SURFACES WITH KIPR-SHIELD, NO-OX, OR EQUAL PRIOR TO ATTACHMENT.

35. MAIN CIRCUIT BREAKER SHALL BE RATED FOR STANDARD A.I.C. RATING HIGHER THAN INCOMING A.I.C.

36. ALL EQUIPMENT SHALL BE U.L. LISTED.

37. ALL EQUIPMENT SHALL BE BRACED FOR STANDARD A.I.C. RATING HIGHER THAN INCOMING FROM UTILITY COMPANY.

38. ALL CORING CLEARANCES SHALL BE FIELD VERIFIED AND ALL CONDUIT ROUTING SHALL BE COORDINATED WITH PROPERTY OWNERS REPRESENTATIVE.

39. ALL CONNECTIONS TO EXISTING MAIN SWITCHGEAR INCLUDING "BUS-TAPS" AND/OR "HOT-TAPS" REQUIRE CERTIFICATION AND APPROVAL. FABRICATION AND CERTIFICATION SHALL BE FURNISHED BY A CONTRACTOR APPROVED BY THE APPLICABLE UTILITY.

40. CONTRACTOR SHALL COORDINATE WORK WITH UTILITY COMPANIES FOR FINAL AND EXACT WORK AND MATERIAL REQUIREMENTS, CONSTRUCT TO UTILITY COMPANIES ENGINEERING PLANS AND SPECIFICATIONS ONLY.

41. ALL BROCHURES, OPERATION MANUALS, CATALOGS, SHOP DRAWINGS, ETC. SHALL BE TURNED OVER TO THE PROJECT MANAGER AT THE COMPLETION OF WORK.

42. SWITCHES AND RECEPTACLES AS SPECIFIED ON FLOOR PLANS.

ELECTRICAL SPECIFICATIONS 3

1. THE CONTRACTOR SHALL VERIFY AND COORDINATE THE POINT OF CONNECTION, CONDUIT ROUTE, INSTALLATION DETAILS AND SPECIFIC PROJECT PARAMETERS WITH THE LOCAL TELEPHONE COMPANY SINGLE POINT OF CONTACT (SPOC) PRIOR TO BEGINNING ANY WORK IN THE FIELD.

2. THE PROJECT ADDRESS AND ANY SPECIFIC UNIT NUMBER MUST BE PROVIDED TO THE LOCAL TELEPHONE COMPANY SPOC MINIMUM 1 WEEK PRIOR TO FINAL INSPECTION TO AVOID DELAY IN INSTALLATION OF SERVICE.

3. THE ELECTRICAL CONTRACTOR SHALL PROVIDE CONDUIT AND FACILITIES AS SHOWN AND DETAILED ON THE PLANS AS REQUIRED FOR TI SERVICE AND A SINGLE POTS LINE TO THE BTS FACILITY.

4. THE TELEPHONE TERMINAL BACKBOARD SHALL BE 30"x8'-0"x5/8" THICK FIRE RATED PLYWOOD SANDED AND PAINTED WITH FIRE RATED PAINT. MOUNT BACKBOARD BOTTOM AT 6" A.F.F. PROVIDE MINIMUM 12" CLEARANCE FROM POWER ON THE SAME WALL AND 42" MINIMUM CLEARANCE FROM ADJOINING OR OPPOSITE WALLS. VERIFY WIDTH.

5. CONDUIT SPECIFICATIONS SHALL BE AS FOLLOWS:

a. GENERAL: ALL TELEPHONE SERVICE CONDUIT SHALL RUN FROM POLE, VAULT, PULL-BOX, MANHOLE OR OTHER POINT OF CONNECTION ESTABLISHED BY THE LOCAL TELEPHONE COMPANY SPOC AND SHALL RUN CONTINUOUS TO AN EDGE OF THE TELEPHONE TERMINAL BACKBOARD.

b. UNDERGROUND CONDUIT AND BENS SHALL BE MINIMUM 4" DIAMETER SCHEDULE 40 PVC. TRENCH DEPTH SHALL PROVIDE FOR MINIMUM 24" COVER OVER CONDUIT. CONDUIT RUN SHALL BE NO MORE THAN 200 FEET IN LENGTH OR HAVE NO MORE THAN (2) 90° BENDS (OR EQUIVALENT) BETWEEN PULL BOXES.

c. ABOVE GROUND CONDUIT AND CONDUIT INSIDE BUILDINGS SHALL BE EMT WITH FITTINGS AS NOTED IN ELECTRICAL NOTES. PROVIDE A UL APPROVED 18" HIGH x 10" DEEP WEATHER RESISTANT NEMA 3R RATED PULL BOX ON ALL ABOVE GRADE CONDUIT RUNS AT INTERVALS NOT TO EXCEED 100 FEET OR (2) 90⅛BENDS (OR EQUIVALENT).

d. OVERHEAD EXTERIOR FEEDS SHALL BE 4" DIAMETER RIGID GALVANIZED CONDUIT WITH A WEATHERHEAD OF A TYPE AND AT A HEIGHT APPROVED BY LOCAL TELEPHONE COMPANY SPOC (MINIMUM 20 FEET ABOVE FINISHED GRADE).

6. A 1-1/4" DIAMETER ORANGE INTER-DUCT SHALL BE PROVIDED IN ALL TELEPHONE SERVICE CONDUIT.

7. A MINIMUM 3/8" YELLOW POLYPROPYLENE PULL ROPE SHALL BE INCLUDED IN EVERY INTER-DUCT WITH A SEPARATE 3/8" YELLOW POLYPROPYLENE PULL ROPE INSIDE THE CONDUIT, NOT INSIDE THE INTER-DUCT.

8. THE ELECTRICAL CONTRACTOR SHALL VERIFY AVAILABILITY OR SHALL PROVIDE A NEW 120V POWER SOURCE MINIMUM 12" FROM TELEPHONE TERMINAL BACKBOARD.

9. THE ELECTRICAL CONTRACTOR SHALL PROVIDE A #6 SOLID INSULATED COPPER GROUND WIRE FROM A GROUND SOURCE APPROVED BY THE LOCAL TELEPHONE COMPANY SPOC MINIMUM STANDARD SOURCE SHALL BE A 5/8" DIAMETER x 8'-0" LONG COPPER CLAD STEEL GROUND ROD.

10. ALL WIRING SHALL BE DONE BY THE LOCAL TELEPHONE COMPANY UNLESS OTHERWISE NOTED.

11. ALL TELEPHONE CONDUIT SHALL BE LABELED AT DESIGNATED TELEPHONE COMPANY.

TELEPHONE SPECIFICATIONS 1

1. UTILITY POINTS OF SERVICE AND WORK / MATERIALS SHOWN ARE BASED UPON PRELIMINARY INFORMATION PROVIDED BY THE UTILITY COMPANIES AND ARE FOR BID PURPOSES ONLY.

2. CONTRACTOR SHALL COORDINATE WITH UTILITY COMPANY FOR FINAL AND EXACT WORK / MATERIALS REQUIREMENTS AND CONSTRUCT TO UTILITY COMPANY ENGINEERING PLANS AND SPECIFICATIONS ONLY. CONTRACTOR SHALL FURNISH AND INSTALL ALL CONDUIT, PULL ROPES, CABLES, PULL BOXES, CONCRETE ENCASEMENT OF CONDUIT (IF REQUIRED), TRANSFORMER PAD, BARRIERS, POLE RISERS, TRENCHING, BACKFILL, PAY ALL UTILITY COMPANY FEES AND INCLUDE ALL REQUIREMENTS IN SCOPE OF WORK.

3. UTILITY CONTACTS FOR THIS PROJECT SHALL BE AS FOLLOWS:

POWER:	TELEPHONE:
PG&E	AT&T

UTILITIES NOTES 2

T-Mobile

T-MOBILE WEST CORPORATION, a DELAWARE CORPORATION
SAN FRANCISCO AREA NEW SITE DEVELOPMENT
1855 GATEWAY BLVD., 9TH FLOOR
CONCORD, CA 94520

PROJECT INFORMATION:

SF23283D
SPRINT MONOPOLE
100 ARMORY DRIVE
SAN FRANCISCO, CA 94321

CURRENT ISSUE DATE:
4/22/10

ISSUED FOR:
CD (100%)

REV.:	DATE:	DESCRIPTION:	BY:
1	8/17/09	CD (90%)	JS
2	10/12/09	CD (100%)	JS
3	11/3/09	CD (100%)	JS
4	3/3/10	CD (100%)	JS
5	4/14/10	CD (100%)	JS
6	4/22/10	CD (100%)	JS

PROJECT ARCHITECT/ENGINEER:

DELTA GROUPS ENGINEERING, INC.
CONSULTING ENGINEERS
5635 WEST LAS POSITAS BOULEVARD,
SUITE 403
PLEASANTON, CA 94588
OFFICE: (925) 468-0115
FAX: (925) 468-0335

DGE PROJECT NUMBER: P08TK041
DRAWN BY: JS

CONSULTANT:

DRAWN BY:	CHK.:	APV.:
JS	.	.

LICENSER:

SHEET TITLE:
ELECTRICAL & TELEPHONE SPECIFICATIONS AND UTILITIES NOTES

SHEET NUMBER:
E-1

KEY NOTES:

1. EXISTING MONOPOLE - LOCATION OF NEW T-MOBILE PANEL ANTENNAS
2. NEW T-MOBILE POWER/TELCO ROUTING WITHIN A 5'-0" WIDE UTILITY EASEMENT (APPROX. 150 L.F. FROM POWER/TELCO P.O.C. TO EQUIPMENT AREA) (2/E3) (3/E3)
3. EXISTING JOINT UTILITY POLE (POLE # 110021676) WITH TRANSFORMER AND TELCO SPLICE JACKET (POWER & TELCO P.O.C.)
4. EXISTING DRAINAGE SWALE (TYP.)
5. EXISTING 6'-0 HIGH CHAIN LINK FENCE - TO BE REMOVED AND REPLACED ON THREE SIDES W/ A 6'-0" HIGH GRAY SPLIT FACED CMU BLOCK WALL
6. EXISTING TREES/LANDSCAPING (TYP.)
7. EXISTING LIGHT POLE (TYP.)
8. EXISTING POWER/TELCO OVERHEAD ROUTING (TYP.)
9. NEW 30'-0"x11'-0" T-MOBILE LEASE AREA (148 SQ. FT. TOTAL)- LOCATED AGAINST AN EXISTING 9'-0" HIGH CHAIN LINK FENCE W/ BARB WIRE
10. NEW 12'-0" WIDE ACCESS EASEMENT OVER EXISTING PAVED ROAD/PARKING LOT (APPROX. 1490 L.F. FROM PUBLIC R.O.W. ALONG ARMORY ROAD TO EQUIPMENT AREA)
11. EXISTING VERIZON FACILITY (TYP.)
12. EXISTING VERIZON 56'-0" HIGH MONOPOLE (TYP.) - THREE (3) TOTAL TOP FLUSH MOUNTED PANEL ANTENNAS, THREE (3) SECTORS, ONE (1) ANTENNA PER SECTOR
13. UNUSED
14. EXISTING AT&T 42'-0" HIGH MONOPOLE (TYP.) - TWELVE (12) TOTAL TOP EXTENSION-ARM MOUNTED PANEL ANTENNAS, THREE (3) SECTORS, FOUR (4) ANTENNAS PER SECTOR
15. EXISTING AT&T 22'-0 x 18'-0" PRE-FABRICATED EQUIPMENT SHELTER (TYP.)
16. EXISTING VERIZON 42'-0" x 15'-0" PRE-FABRICATED EQUIPMENT SHELTER (TYP.)

NOTES:
1. DO NOT SCALE DRAWINGS. ALL DIMENSIONS OF AND BETWEEN EXISTING BUILDINGS/STRUCTURES, OR RELATIVE DISTANCES AS SHOWN BETWEEN EXISTING BUILDINGS/STRUCTURES AND THE TRUE NORTH ARE TO BE CONFIRMED BY THE SURVEYOR.

2. POWER/TELCO ROUTING AND DESIGN ARE PRELIMINARY AND MUST BE VERIFIED WITH LOCAL UTILITY COMPANIES.

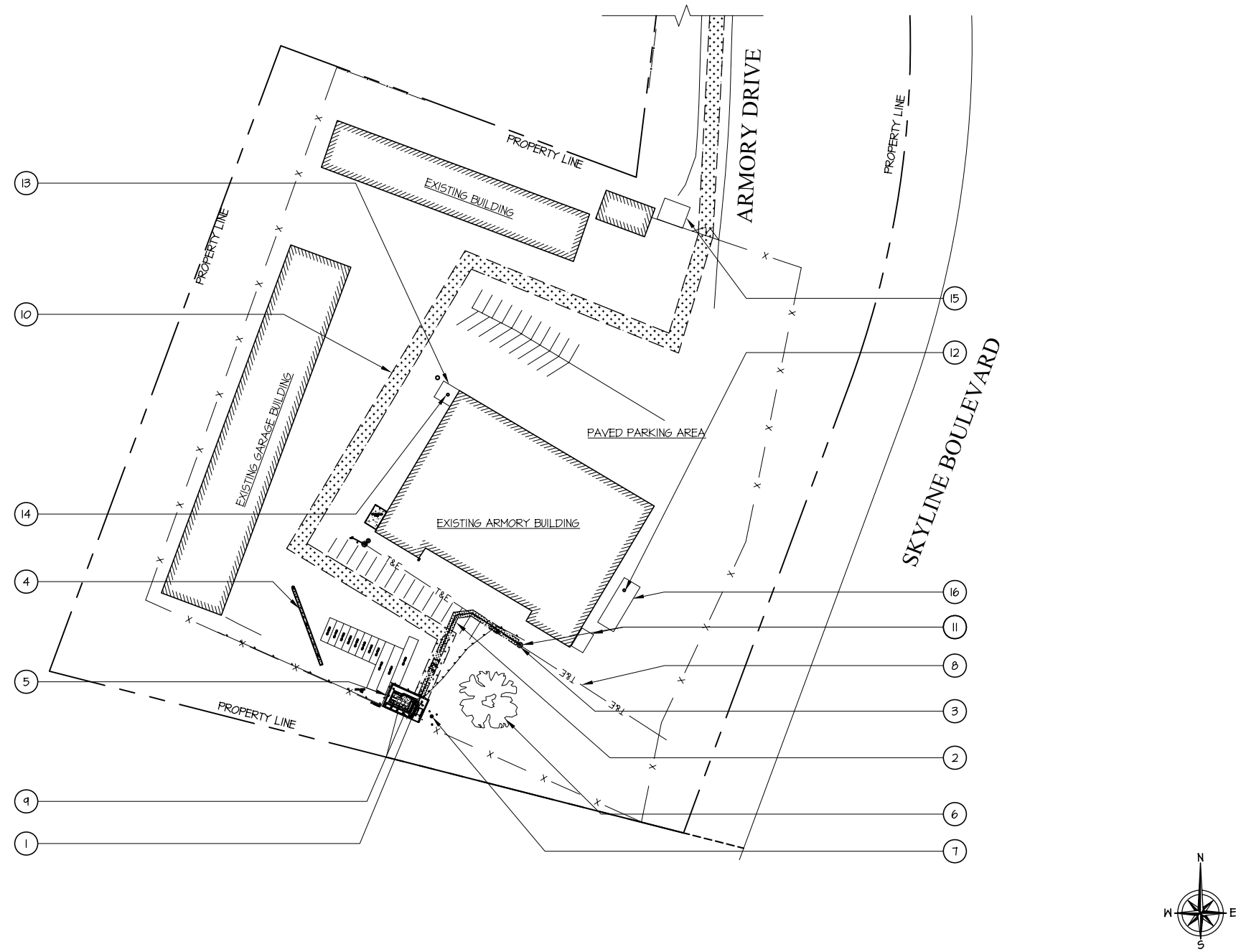

UTILITIES PLAN

SCALE: 1 inch = 50 ft (50' 0' 50' 100')

1

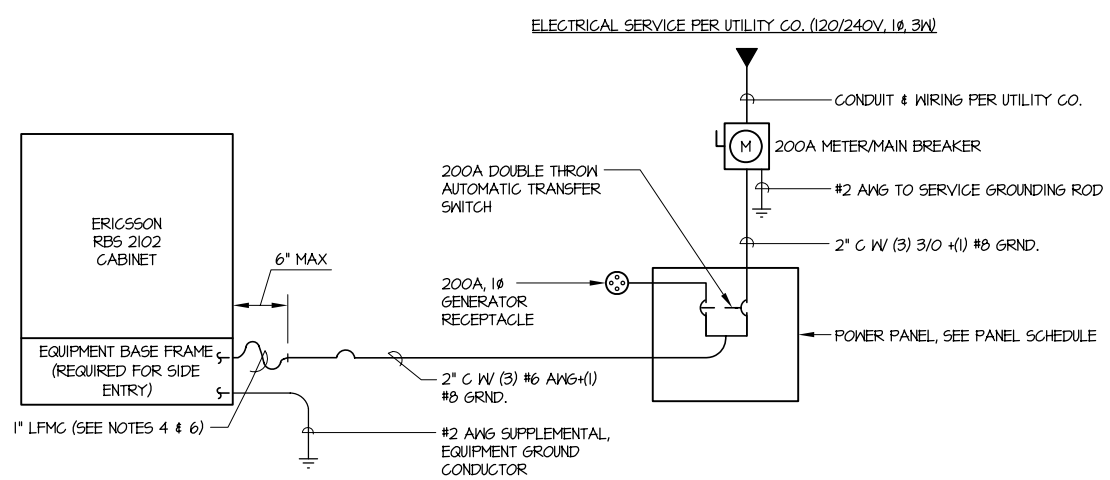

NOTES:
1. SUBCONTRACTOR SHALL PROVIDE 200AMP, SINGLE PHASE, 120/240 VAC, 60HZ SERVICE FOR SITE.

2. SUBCONTRACTOR SHALL COORDINATE WITH UTILITY COMPANY BEFORE THE START OF CONSTRUCTION. POWER AND TELEPHONE CONDUIT SHALL BE PROVIDED AND INSTALLED PER UTILITY REQUIREMENTS.

3. FOR COMPLETE INTERNAL WIRING AND ARRANGEMENT REFER TO DRAWINGS PROVIDED BY PANEL MANUFACTURER.

4. SUBCONTRACTOR SHALL INSTALL SUFFICIENT LENGTHS OF LFMC INCLUDING ALL CONDUIT FITTINGS (NUTS, REDUCING BUSHINGS, ELBOWS, COUPLINGS, ETC) NECESSARY FOR CONNECTION FROM IMC CONDUIT TO THE INTERIOR OF THE BTS CABINET.

5. SUBCONTRACTOR SHALL PROVIDE ELECTRICAL SERVICE EQUIPMENT WITH FAULT CURRENT RATINGS GREATER THAN THE AVAILABLE FAULT CURRENT FROM THE POWER UTILITY.

6. CUT, COIL AND TAPE A 3 FOOT PIGTAIL FROM END OF LFMC FOR TERMINATING BY BTS EQUIPMENT MANUFACTURER.

7. SUBCONTRACTOR SHALL VERIFY THAT THE MAIN BONDING JUMPER AND GROUNDING ELECTRODE CONDUCTOR IS INSTALLED PROPERLY WHEN PANEL IS SERVICE ENTRANCE EQUIPMENT.

1-LINE DIAGRAM

3

PANEL "A"

200A MAIN BREAKER — 120/240V, 1 PHASE, 3 WIRE

DESC.	AMP	POLE	NO.	LOAD 1	LOAD 2	NO.	POLE	AMP	DESC.
RBS 2102	40	2	1	3425 (VA)	3425 (VA)	7	2	40	RBS 3106
			2	3425 (VA)	3425 (VA)	8			
RBS 3106 (FUTURE)	40	2	3	-	-	9	2	40	RBS 3106 (FUTURE)
			4	-	-	10			
SPARE	-	-	5	-	-	11	-	-	SPARE
SPARE	-	-	6	-	-	12	-	-	SPARE
LOAD PHASE:				6850	6850				
TOTAL CONNECTED LOAD:	13700 VA / 240V = 57.08 A < 200A								

PANEL SCHEDULE

2

T-Mobile

T-MOBILE WEST CORPORATION, a DELAWARE CORPORATION
SAN FRANCISCO AREA NEW SITE DEVELOPMENT
1855 GATEWAY BLVD., 9TH FLOOR
CONCORD, CA 94520

PROJECT INFORMATION:

SF23283D
SPRINT MONOPOLE
100 ARMORY DRIVE
SAN FRANCISCO, CA 94321

CURRENT ISSUE DATE: 4/22/10

ISSUED FOR: CD (100%)

REV.:	DATE:	DESCRIPTION:	BY:
1	8/17/09	CD (90%)	JS
2	10/12/09	CD (100%)	JS
3	11/3/09	CD (100%)	JS
4	3/3/10	CD (100%)	JS
5	4/14/10	CD (100%)	JS
6	4/22/10	CD (100%)	JS

PROJECT ARCHITECT/ENGINEER:

DELTA GROUPS ENGINEERING, INC.
CONSULTING ENGINEERS
5635 WEST LAS POSITAS BOULEVARD, SUITE 403
PLEASANTON, CA 94588
OFFICE: (925) 468-0115
FAX: (925) 468-0335

DGE PROJECT NUMBER: P08TK041
DRAWN BY: JS

CONSULTANT:

DRAWN BY:	CHK.:	APV.:
JS	.	.

LICENSER:

SHEET TITLE: **UTILITIES SITE PLAN, 1-LINE DIAGRAM, &PANEL SCHEDULE**

SHEET NUMBER: **E-2**

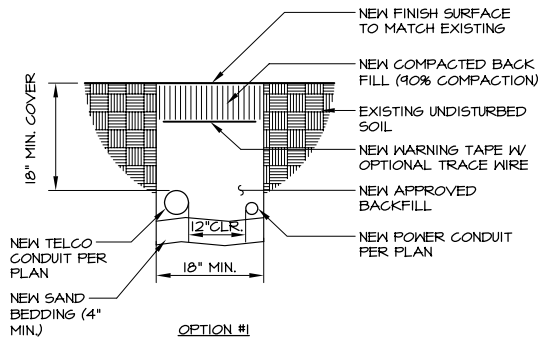

OPTION #1

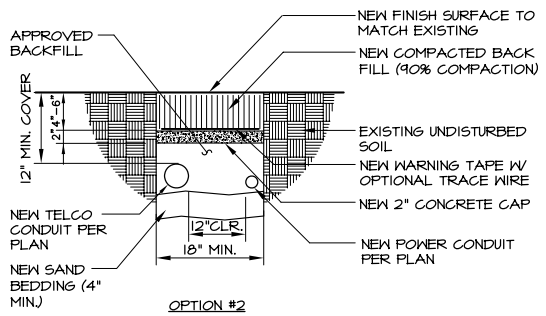

OPTION #2

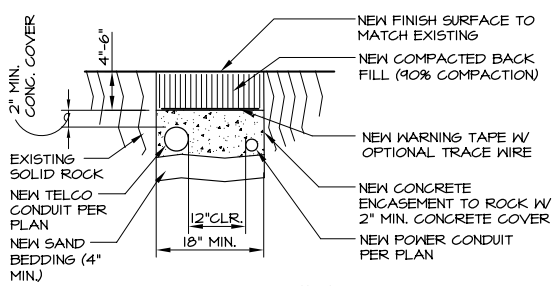

OPTION #3

NOTE:
1. TRENCHING DETAILS PER C.E.C. ARTICLE 300-5.

2. CONTRACTOR TO SELECT BEST OPTION FOR CONDITIONS.

UTILITIES TRENCH | 2

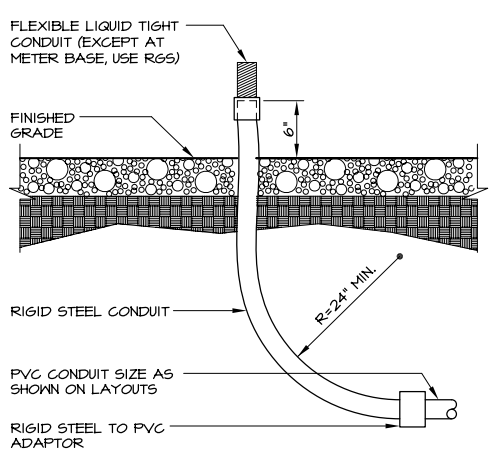

CONDUIT STUB-UP | 3

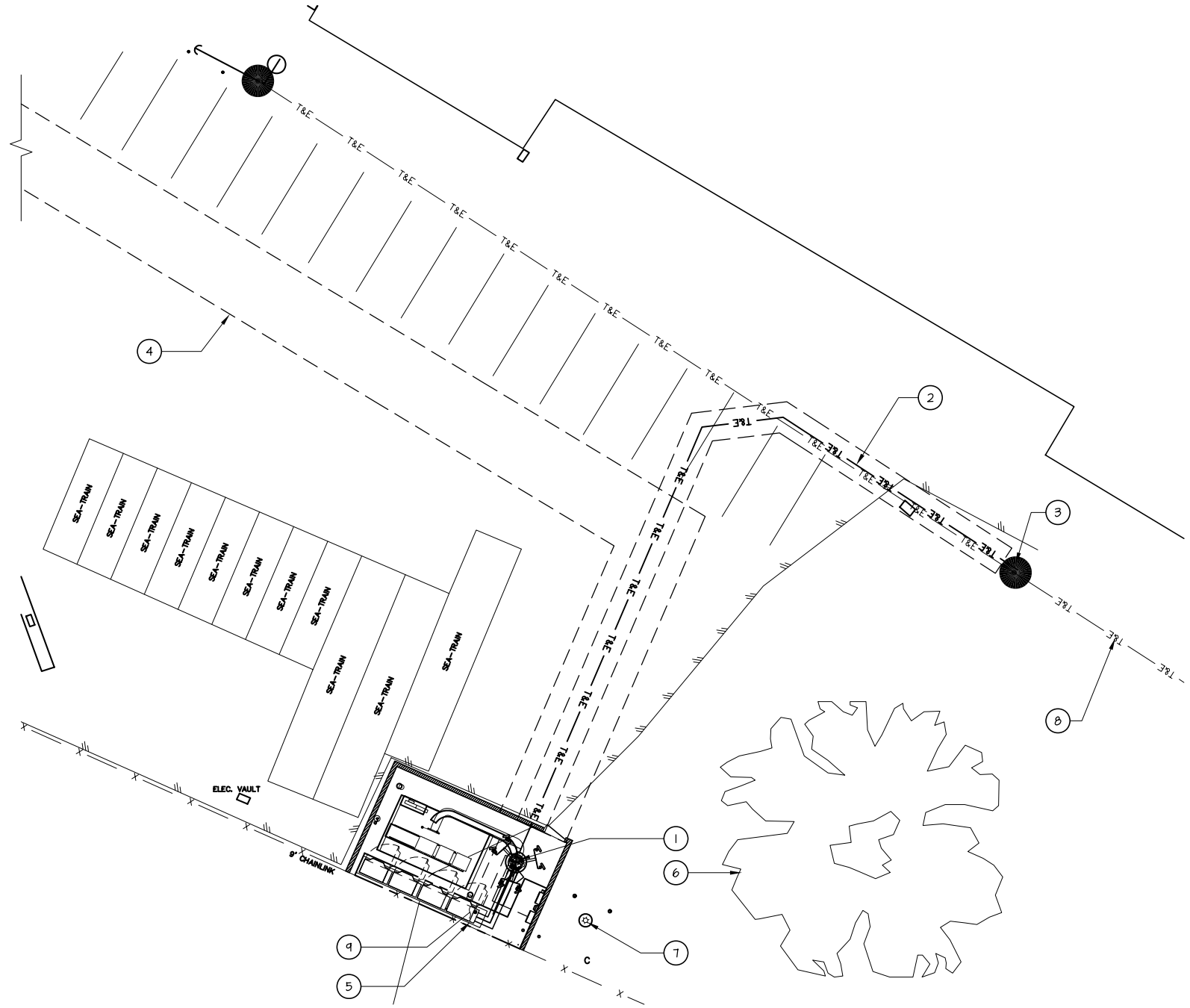

NOTES:
1. DO NOT SCALE DRAWINGS. ALL DIMENSIONS OF AND BETWEEN EXISTING BUILDINGS/STRUCTURES, OR RELATIVE DISTANCES AS SHOWN BETWEEN EXISTING BUILDINGS/STRUCTURES AND THE TRUE NORTH ARE TO BE CONFIRMED BY THE SURVEYOR.

2. POWER/TELCO ROUTING AND DESIGN ARE PRELIMINARY AND MUST BE VERIFIED WITH LOCAL UTILITY COMPANIES.

KEY NOTES:

1. EXISTING MONOPOLE - LOCATION OF NEW T-MOBILE PANEL ANTENNAS
2. NEW T-MOBILE POWER/TELCO ROUTING WITHIN A 5'-0" WIDE UTILITY TRENCH (APPROX. 150 L.F. FROM POWER/TELCO P.O.C. TO EQUIPMENT AREA) (2 - 3 -)
3. EXISTING JOINT UTILITY POLE (POLE # 110021676) WITH TRANSFORMER AND TELCO SPLICE JACKET (POWER & TELCO P.O.C.)
4. NEW 12'-0" WIDE ACCESS EASEMENT - SEE 1/E2 FOR CONTINUATION
5. NEW COAX CABLE TRAY
6. EXISTING TREES/LANDSCAPING (TYP.)
7. EXISTING LIGHT POLE (TYP.)
8. EXISTING POWER/TELCO OVERHEAD ROUTING (TYP.)
9. NEW 30'-0"x11'-0" T-MOBILE LEASE AREA (148 SQ. FT. TOTAL)- LOCATED AGAINST A NEW 6'-0" HIGH GRAY SPLIT FACE CMU BLOCK WALL

ENLARGED UTILITIES PLAN | 1

SCALE: 3/32 inch = 1 ft

12' 0' 12' 24'

T-Mobile

T-MOBILE WEST CORPORATION, a DELAWARE CORPORATION
SAN FRANCISCO AREA NEW SITE DEVELOPMENT
1855 GATEWAY BLVD., 9TH FLOOR
CONCORD, CA 94520

PROJECT INFORMATION:

SF23283D
SPRINT MONOPOLE
100 ARMORY DRIVE
SAN FRANCISCO, CA 94321

CURRENT ISSUE DATE:
4/22/10

ISSUED FOR:
CD (100%)

REV.:	DATE:	DESCRIPTION:	BY:
1	8/17/09	CD (90%)	JS
2	10/12/09	CD (100%)	JS
3	11/3/09	CD (100%)	JS
4	3/3/10	CD (100%)	JS
5	4/14/10	CD (100%)	JS
6	4/22/10	CD (100%)	JS

PROJECT ARCHITECT/ENGINEER:

DELTA GROUPS ENGINEERING, INC.
CONSULTING ENGINEERS
5635 WEST LAS POSITAS BOULEVARD, SUITE 403
PLEASANTON, CA 94588
OFFICE: (925) 468-0115
FAX: (925) 468-0335

DGE PROJECT NUMBER: P08TK041
DRAWN BY: JS

CONSULTANT:

DRAWN BY:	CHK.:	APV.:
JS	.	.

LICENSER:

SHEET TITLE:
ENLARGED UTILITIES PLAN & DETAILS

SHEET NUMBER:
E-3

NOTES:
1. DRAWING IS A DIAGRAM. SEE SHEETS E2 AND E3 FOR SITE SPECIFIC INFORMATION.

2. SEE DETAIL 3/E4, GENERAL GROUNDING NOTES, FOR ADDITIONAL INFORMATION.

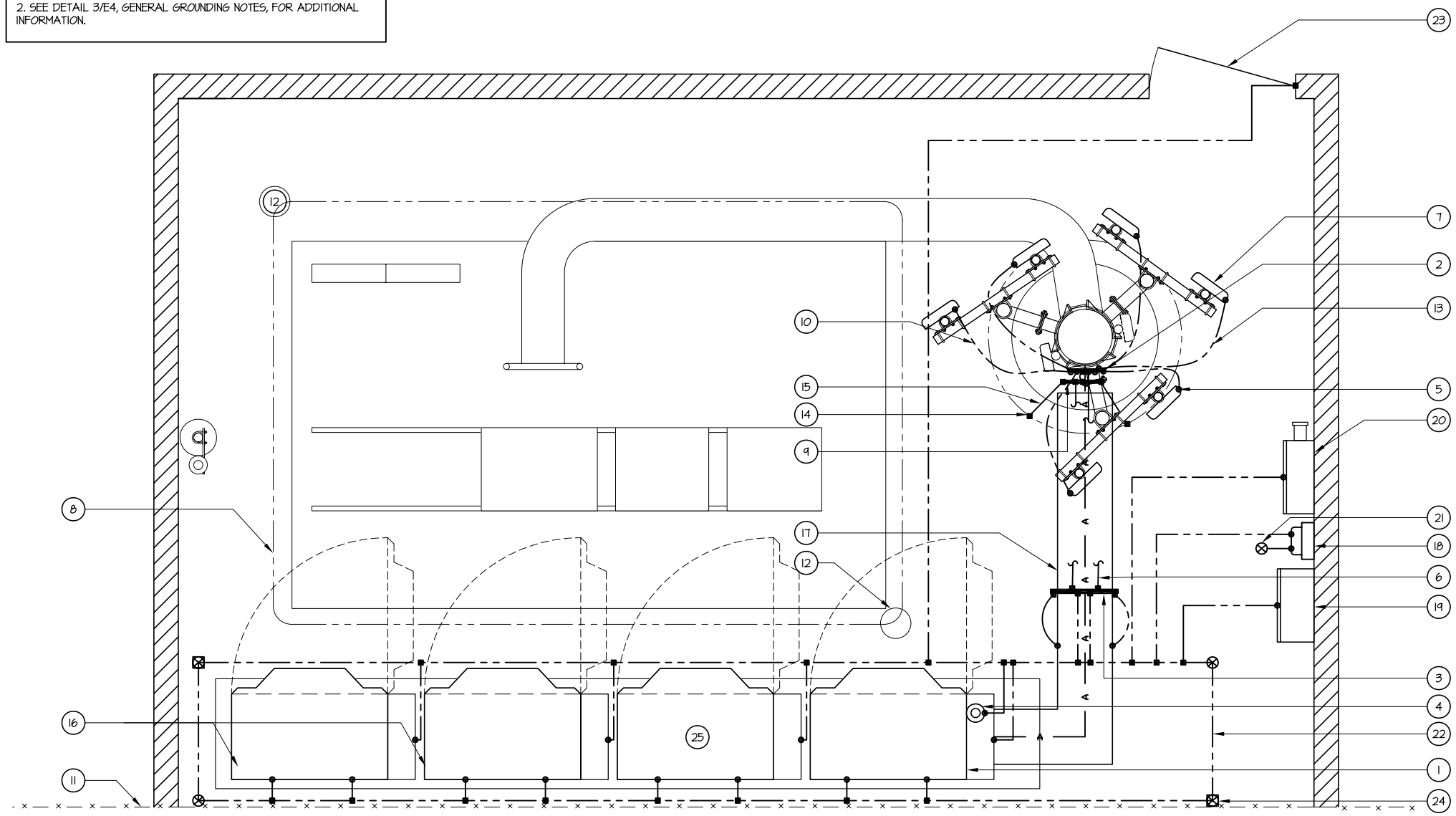

GROUNDING PLAN

1

KEY NOTES:

1. NEW T-MOBILE EQUIPMENT CABINET (TYP.)
2. NEW 12" GROUND BUS BAR AT ANTENNA LOCATION (1/E5 SIM.)
3. NEW 24" MAIN GROUND BUS BAR (TYP.) (1/E5)
4. NEW T-MOBILE GPS ANTENNA
5. NEW MECHANICAL CONNECTION (TYP.)
6. NEW ANTENNA CABLE GROUNDING (2/E5)
7. NEW T-MOBILE PANEL ANTENNA (TYP.) (4/E5)
8. EXISTING GROUND RING (FIELD VERIFY)
9. NEW 12" GROUND BUS BAR AT MONOPOLE BASE (1/E5 SIM.)
10. TIE TO MAIN GROUND BUS BAR (TYP.) (VIA ANTENNA LEVEL BUS BAR)
11. EXISTING 9'-0" HIGH CHAIN LINK FENCE W/ 3 STRANDS OF BARB WIRE
12. EXISTING GROUND TEST WELL
13. NEW #2 AWG BCW (TYP.)
14. NEW CADWELD CONNECTION (TYP.) (2/-)
15. NEW #2 AWG BCW (TYP.) - TIE TO EXISTING GROUND RING
16. FUTURE ERICSSON RBS 2102 EQUIPMENT CABINET
17. NEW COAX CABLE TRAY
18. NEW 200A METER W/ MAIN DISCONNECT
19. NEW TELCO CABINET
20. NEW POWER CABINET
21. NEW MAIN ELECTRICAL SERVICE GROUND (5/E5)
22. NEW GROUND RING (#2 AWG, BCW)
23. NEW CORRUGATED METAL ACCESS GATE (7/E5)
24. NEW GROUND ROD WITH ACCESS (6/E5)
25. NEW ERICSSON RBS 3106 EQUIPMENT CABINET

GENERAL GROUNDING NOTES

3

1. PROVIDE A COMPLETE GROUNDING SYSTEM PER NATIONAL ELECTRICAL CODE ARTICLE 250 AND EQUIPMENT MANUFACTURER'S REQUIREMENTS. USE THESE DRAWINGS AS MINIMUM GUIDELINE TO IMPLEMENT CARRIER AND EQUIPMENT CABINET MANUFACTURER SPECIFICATIONS.

2. ALL DETAILS ARE SHOWN IN GENERAL TERMS, ACTUAL GROUNDING INSTALLATION AND MOUNTING MAY VARY DUE TO SITE SPECIFIC CONDITIONS.

3. ALL GROUNDING CONDUCTORS SHALL BE COPPER.

4. ALL GROUNDING WIRE BELOW GRADE SHALL BE BARE #2 TINNED SOLID COPPER WIRE BURIED @ 18" MINIMUM. ALL CONDUIT BELOW GRADE SHALL BE PVC SCHEDULE 80.

5. ALL GROUND WIRE ABOVE GRADE IS STRANDED COPPER (UNO). SIZE AS SHOWN ON PLANS.

6. USE MINIMUM #2/0 AWG COPPER CONDUCTORS FOR COMMUNICATION SERVICE GROUNDING CONDUCTORS.

7. ALL GROUND CONNECTIONS SHALL BE LISTED FOR THE PURPOSED INTENDED.

8. ALL LUGS SHALL BE 2-HOLE LONG-BARREL SOLID COPPER BURNDY THOMAS & BETTS OR EQUAL.

9. MINIMUM BEND RADIUS FOR GROUNDING CONDUCTORS #2 AND LARGER SHALL BE 12", 8" MINIMUM RADIUS FOR SMALL CONDUCTORS.

10. ALL CONNECTIONS AT BELOW GRADE APPLICATIONS SHALL BE CADWELD.

11. ALL IRREVERSIBLE COMPRESSION TYPE CONNECTORS SHALL BE INSTALLED USING A 12 TON HYDRAULIC PRESS MINIMUM.

12. INSTALL GROUNDING AND BONDING CONDUCTORS WITH SUFFICIENT SLACK TO AVOID BREAKING DUE TO SETTLEMENT AND MOVEMENTS OF CONDUCTORS AT ATTACHED POINTS.

13. COAT ALL BOLTED LUG & BUS GROUND CONTACT SURFACES WITH KOPR-SHEILD, NO-OX, OR PRIOR TO ATTACHMENT.

14. GROUNDING RODS SHALL BE 5/8" DIAMETER x10'-0" LONG COPPER CLAD STEEL.

15. WHERE MULTIPLE GROUND RODS ARE INSTALLED, THEY SHALL NOT BE LESS THAN 10 FEET NOR MORE THAN 16 FEET APART UNLESS APPROVED BY THE CARRIER REPRESENTATIVE, OR CONSTRUCTION MANAGER.

16. DRIVEN GROUND RODS SHALL BE USED EXCEPT WHERE SPECIFIC SITE CONDITIONS PRESENT DIFFICULTY, IN WHICH CASE A ELECTROLYTIC (CHEMICAL) ROD SYSTEMS MAY BE USED, SUCH AS MANUFACTURED BY LYNCOLE KIT GROUNDING SYSTEM OR EQUAL.

17. CONTRACTOR SHALL TEST GROUND RESISTANCE AT "MGB" TO VERIFY THAT RESISTANCE SHALL NOT EXCEED 5 OHMS AND SHALL SUBMIT AN INDEPENDENT TESTING REPORT TO ATTFWG REPRESENTATIVE, OR CONSTRUCTION MANAGER INDICATING RESISTANCE VALUE OBTAINED. CONTRACTOR SHALL PROVIDE GROUNDING SYSTEM AS PART OF ITS BID, AS REQUIRED TO ATTAIN A 5 OHM VALUE OR LESS.

18. TESTING: PERFORM FULL FALL OF POTENTIAL TEST PER EEE STANDARD NO. 81: SECTION 9.04 ON THE MAIN GROUNDING REQUIREMENTS.

19. FINAL GROUND TEST SHALL BE MADE IN PRESENCE OF THE CARRIER REPRESENTATIVE, OR CONSTRUCTION MANAGER.

20. REFER TO CARRIER AND EQUIPMENT CABINET MANUFACTURER DRAWINGS AND SPECIFICATIONS FOR ADDITIONAL GROUNDING REQUIREMENTS.

21. EGR REFERS TO #2 SOLID TINNED COPPER, "EXTERNAL GROUND ROD."

22. MAIN GROUND BUS (MGB) IS TYPICALLY LOCATED BEHIND OR ADJACENT TO POWER CABINET OR AS SHOWN.

23. ANTENNA GROUND BUS (AGB) SHALL BE LOCATED AT TOP OF ANTENNA MOUNTING STRUCTURE, ADJACENT TO THE ANTENNA MOUNT(S).

24. TOWER GROUND BUS (TGB) SHALL BE LOCATED AT THE BASE OF THE ANTENNA MOUNTING STRUCTURE, ADJACENT TO WHERE THE COAXIAL CABLES ARE ROUTED.

25. SEAL ALL GROUND KITS AND CONNECTIONS WITH "ANDREW" WEATHER SEAL.

CADWELD DETAILS

2

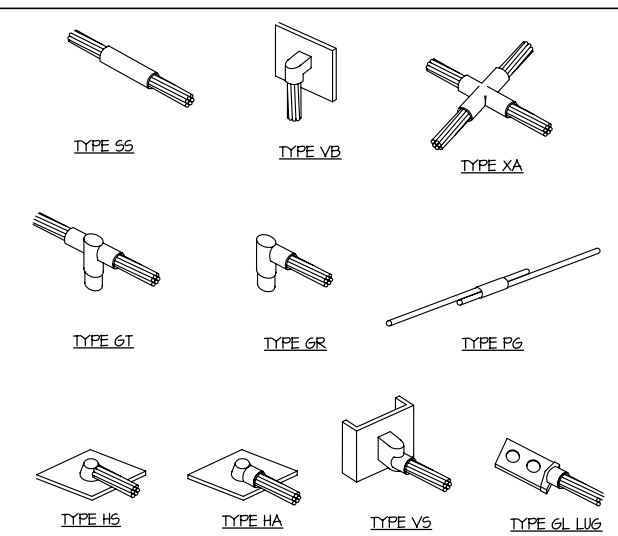

T-Mobile

T-MOBILE WEST CORPORATION, a DELAWARE CORPORATION
SAN FRANCISCO AREA NEW SITE DEVELOPMENT
1855 GATEWAY BLVD., 9TH FLOOR
CONCORD, CA 94520

PROJECT INFORMATION:

SF23283D
SPRINT MONOPOLE
100 ARMORY DRIVE
SAN FRANCISCO, CA 94321

CURRENT ISSUE DATE:
4/22/10

ISSUED FOR:
CD (100%)

REV.:	DATE:	DESCRIPTION:	BY:
1	8/17/09	CD (90%)	JS
2	10/12/09	CD (100%)	JS
3	11/3/09	CD (100%)	JS
4	3/3/10	CD (100%)	JS
5	4/14/10	CD (100%)	JS
6	4/22/10	CD (100%)	JS

PROJECT ARCHITECT/ENGINEER:

DELTA GROUPS ENGINEERING, INC.
CONSULTING ENGINEERS
5635 WEST LAS POSITAS BOULEVARD,
SUITE 403
PLEASANTON, CA 94588
OFFICE: (925) 468-0115
FAX: (925) 468-0335

DGE PROJECT NUMBER: P08TK041
DRAWN BY: JS

CONSULTANT:

DRAWN BY:	CHK.:	APV.:
JS	.	.

LICENSER:

SHEET TITLE:
GROUNDING PLAN, GENERAL GROUNDING NOTES, & DETAILS

SHEET NUMBER:
E-4

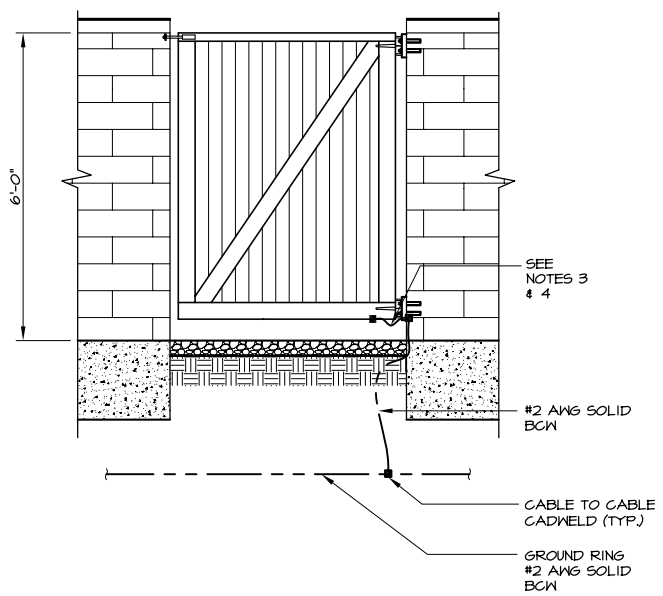

NOTES:
1. THE #2 AWG, BCW, FROM THE RING GROUND SHALL BE CADWELDED TO THE POST ABOVE GRADE.

2. BOND EACH HORIZONTAL POLE/BRACE TO EACH OTHER AND TO EACH VERTICAL POLE BONDED TO THE EXTERIOR GROUND RING.

3. GATE JUMPER SHALL BE #4/0 AWG WELDING CABLE OR FLEXIBLE COPPER BRAID BURNDY TYPE B WITH SLEEVES ON EACH END DESIGNED FOR EXOTHERMIC WELDING.

4. GATE JUMPER SHALL BE INSTALLED SO THAT IT WILL NOT BE SUBJECTED TO DAMAGING STRAIN WHEN GATE IS FULLY OPEN IN EITHER DIRECTION.

GATE GROUNDING | 7

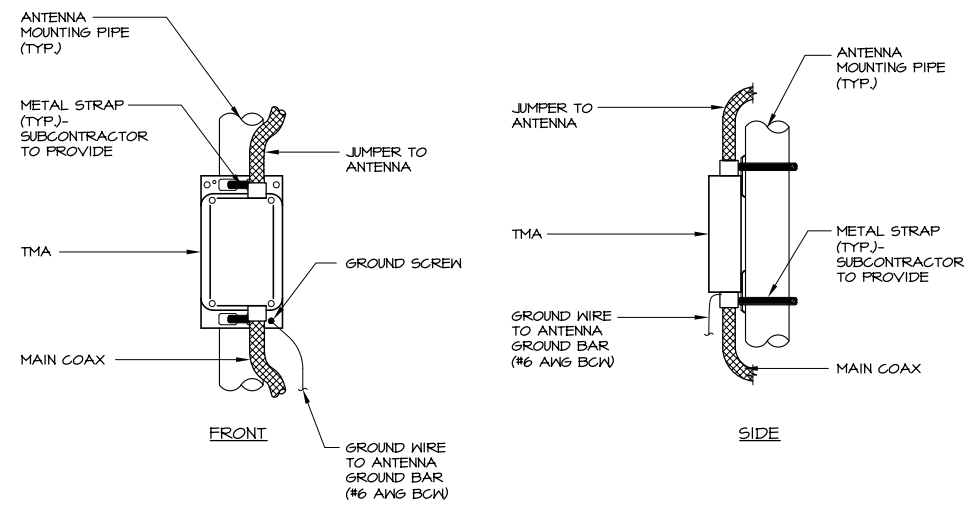

TMA GROUNDING | 4

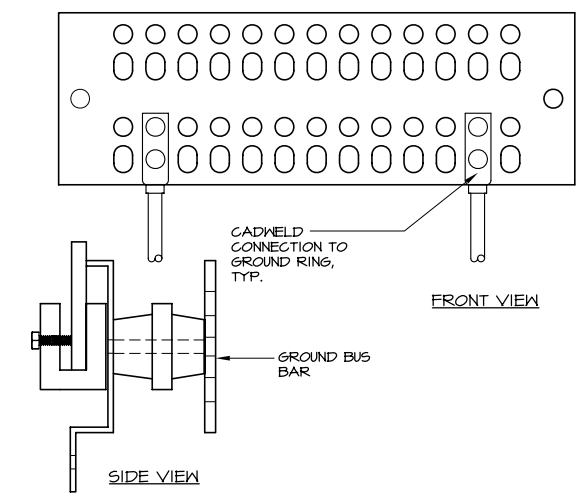

GROUND BUS BAR | 1

UNUSED | .

UNUSED | -

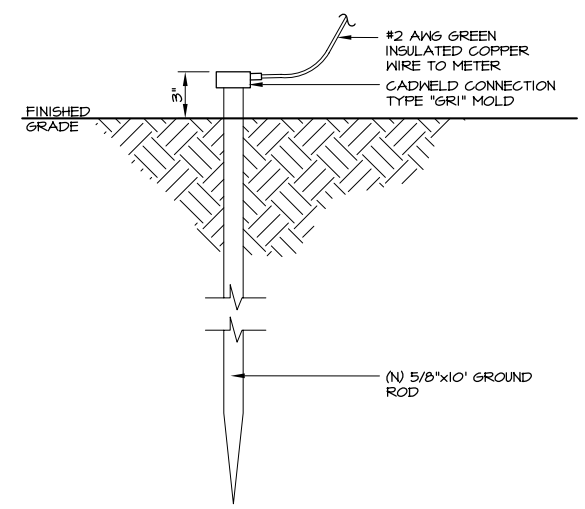

MAIN ELECTRICAL SERVICE GROUND | 5

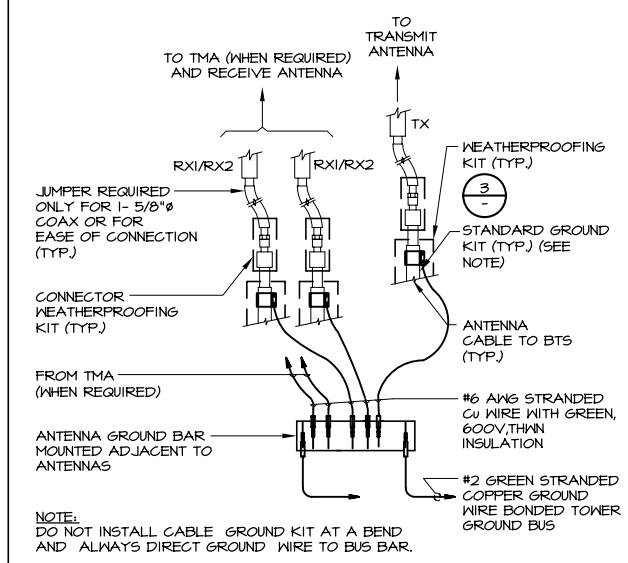

NOTE:
DO NOT INSTALL CABLE GROUND KIT AT A BEND AND ALWAYS DIRECT GROUND WIRE TO BUS BAR.

ANTENNA CABLE GROUNDING | 2

UNUSED | .

UNUSED | -

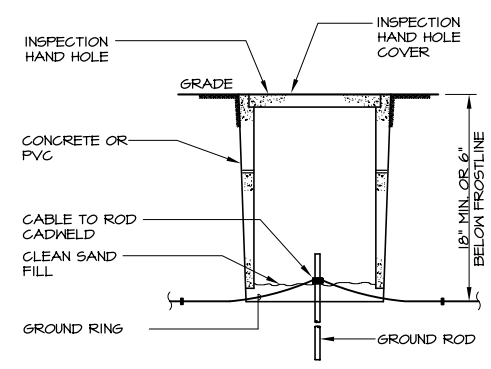

NOTE:
INSPECTION HAND HOLE MAY BE CONCRETE OR PVC AND SHALL BE A MINIMUM OF 8" IN WIDTH/DIAMETER

GROUND ROD WITH ACCESS | 6

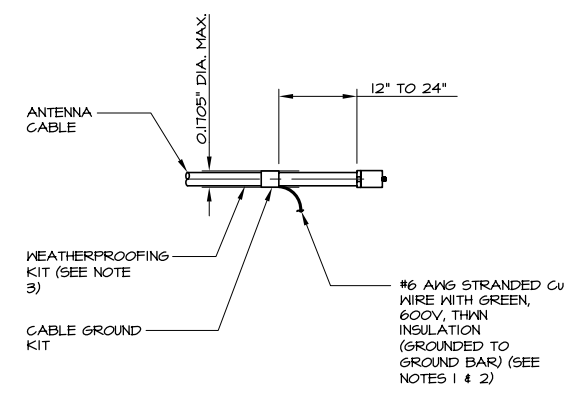

NOTES:
1. DO NOT INSTALL CABLE GROUND KIT AT A BEND AND ALWAYS DIRECT GROUND WIRE DOWN TO GROUND BAR.

2. GROUNDING KIT SHALL BE TYPE AND PART NUMBER AS SUPPLIED OR RECOMMENDED BY CABLE MANUFACTURER.

3. WEATHER PROOFING SHALL BE (TYPE AND PART NUMBER AS SUPPLIED OR RECOMMENDED BY CABLE MANUFACTURER.)

ANTENNA GROUNDING KIT | 3

T-Mobile

T-MOBILE WEST CORPORATION, a DELAWARE CORPORATION
SAN FRANCISCO AREA NEW SITE DEVELOPMENT
1855 GATEWAY BLVD., 9TH FLOOR
CONCORD, CA 94520

PROJECT INFORMATION:

SF23283D
SPRINT MONOPOLE
100 ARMORY DRIVE
SAN FRANCISCO, CA 94321

CURRENT ISSUE DATE:
4/22/10

ISSUED FOR:
CD (100%)

REV.:	DATE:	DESCRIPTION:	BY:
1	8/17/09	CD (90%)	JS
2	10/12/09	CD (100%)	JS
3	11/3/09	CD (100%)	JS
4	3/3/10	CD (100%)	JS
5	4/14/10	CD (100%)	JS
6	4/22/10	CD (100%)	JS

PROJECT ARCHITECT/ENGINEER:

DELTA GROUPS ENGINEERING, INC.
CONSULTING ENGINEERS
5635 WEST LAS POSITAS BOULEVARD, SUITE 403
PLEASANTON, CA 94588
OFFICE: (925) 468-0115
FAX: (925) 468-0335

DGE PROJECT NUMBER: P08TK041
DRAWN BY: JS

CONSULTANT:

DRAWN BY:	CHK.:	APV.:
JS	.	.

LICENSER:

SHEET TITLE:
GROUNDING DETAILS

SHEET NUMBER:
E-5

SECTOR	NO. OF ANTENNAS	ANTENNA MAKE/MODEL NO.	AZIMUTH	TMA QUANTITY	ELEC. DOWNTILT	MECH. DOWNTILT	BOTTOM JUMPER SIZE	BOTTOM JUMPER LENGTH	MAIN COAX SIZE	MAIN COAX LENGTH	TOP JUMPER SIZE	TOP JUMPER LENGTH	COLOR CODES (AS APPLICABLE)							
ALPHA	2	RFS APX16DWV-16DWV-S-E-A20	350°	2	2°	0°	1/2" Ø	6'-0"	7/8" Ø	65'-0"	1/2" Ø	6'-0"	COAX 1	RED	COAX 3	RED-RED-RED	COAX 5	RED-RED-RED-RED-RED	COAX 7	RED-RED-RED-RED-RED-RED-RED
													COAX 2	RED-RED	COAX 4	RED-RED-RED-RED	COAX 6	RED-RED-RED-RED-RED-RED	COAX 8	RED-RED-RED-RED-RED-RED-RED-RED
BETA	2	RFS APX16DWV-16DWV-S-E-A20	60°	2	2°	0°	1/2" Ø	6'-0"	7/8" Ø	65'-0"	1/2" Ø	6'-0"	COAX 1	GREEN	COAX 3	GREEN-GREEN-GREEN	COAX 5	GREEN-GREEN-GREEN-GREEN-GREEN	COAX 7	GREEN-GREEN-GREEN-GREEN-GREEN-GREEN-GREEN
													COAX 2	GREEN-GREEN	COAX 4	GREEN-GREEN-GREEN-GREEN	COAX 6	GREEN-GREEN-GREEN-GREEN-GREEN-GREEN	COAX 8	GREEN-GREEN-GREEN-GREEN-GREEN-GREEN-GREEN-GREEN
GAMMA	2	RFS APX16DWV-16DWV-S-E-A20	160°	2	2°	0°	1/2" Ø	6'-0"	7/8" Ø	65'-0"	1/2" Ø	6'-0"	COAX 1	BLUE	COAX 3	BLUE-BLUE-BLUE	COAX 5	BLUE-BLUE-BLUE-BLUE-BLUE	COAX 7	BLUE-BLUE-BLUE-BLUE-BLUE-BLUE-BLUE
													COAX 2	BLUE-BLUE	COAX 4	BLUE-BLUE-BLUE-BLUE	COAX 6	BLUE-BLUE-BLUE-BLUE-BLUE-BLUE	COAX 8	BLUE-BLUE-BLUE-BLUE-BLUE-BLUE-BLUE-BLUE
GPS	1	ERICSSON	N/A	N/A	N/A	N/A	N/A	N/A	1/2" Ø	15'-0"	N/A	N/A	COAX 1	GRAY	.	.	.	.	.	.
													.	.	.	.	.	.	.	.

NOTES:
1. ALL MATERIALS ON THE ABOVE TABLE SHALL BE PROVIDED BY THE CONTRACTOR TO THE SUBCONTRACTOR FOR INSTALLATION.

2. SUBCONTRACTOR SHALL AS-BUILT CABLE LENGTHS AND PROVIDE ANTENNA SERIAL NUMBERS ON RED-LINED DRAWINGS.

3. ANTENNAS SHALL BE PROCURED AND INSTALLED WITH DOWNTILT BRACKETS AND HEAVY DUTY CLAMPS SUPPLIED BY ANTENNA MANUFACTURER.

4. COAX GROUND KITS, COAX WEATHER PROOFING, SNAP-IN HANGER CLAMPS AND HOISTING GRIPS SHALL BE PROVIDED BY THE CONTRACTOR TO THE SUBCONTRACTOR FOR INSTALLATION.

5. CONTRACTOR MUST ALSO INSTALL THE COAXIAL CABLES FOR THE FUTURE ANTENNAS.

6. CONTRACTOR TO REFER TO B.O.M. AND RF BUILD SHEET FOR NUMBER AND TYPE OF ANTENNA(S) TO INSTALL.

7. FOLLOW DETAIL 2/E6 FOR COLOR CODING.

ANTENNA & CABLE SCHEDULE | 1

UNUSED | .

CABLE MARKING TAGS | 3

A1 - 1

TO PROVIDE ADDITIONAL IDENTIFICATION RF CABLES SHALL BE IDENTIFIED WITH A METAL TAG MADE OF STAINLESS STEEL OR BRASS AND STAMPED WITH THE SECTOR, ANTENNA POSTION, AND CABLE NUMBER. THE ID MARKING LOCATIONS SHOULD BE AS PER "CABLE MARKING LOCATIONS TABLE". THE TAG SHOULD BE ATTACHED WITH CORROSION PROOF WIRE AROUND THE CABLE.

UNUSED | .

UNUSED | .

COAX COLOR CODING | 2

NOTES:
1. SECTOR ORIENTATION/AZIMUTH WILL VARY FROM REGION TO REGION AND IS SITE SPECIFIC. REFER TO RF REPORT FOR EACH SITE TO DETERMINE THE ANTENNA LOCATION AND FUNCTION OF EACH TOWER SECTOR FACE.

2. THE STANDARD IS BASED ON FOUR COLORED TAPES-RED, BLUE, GREEN, AND VIOLET. THESE TAPES SHOULD BE READILY AVAILABLE TO THE ELECTRICIAN OR CONTRACTOR ON SITE.

3. USING COLOR BANDS ON THE CABLES, MARK ALL RF CABLE BY SECTOR AND CABLE NUMBER AS SHOWN ON "CABLE MARKING COLOR CONVENTION TABLE".

4. ALL COLOR CODE TAPE SHALL BE 3M-35 AND SHALL BE INSTALLED USING A MINIMUM OF (3) WRAPS OF TAPE AND SHALL BE NEATLY TRIMMED AND SMOOTHED OUT SO AS TO AVOID UNRAVELING.

5. ALL COLOR BANDS INSTALLED AT THE TOWER TOP SHALL BE A MINIMUM OF 3" WIDE AND SHALL HAVE A MINIMUM OF 3/4" OF SPACING BETWEEN EACH COLOR.

6. ALL COLOR BANDS INSTALLED AT OR NEAR THE GROUND SHALL BE A MINIMUM OF 3/4" WIDE.

7. ALL COLOR CODES SHALL BE INSTALLED SO AS TO ALIGN NEATLY WITH ONE ANOTHER FROM SIDE-TO-SIDE.

8. SEE DETAIL 3/E6 FOR CABLE MARKING TAG.

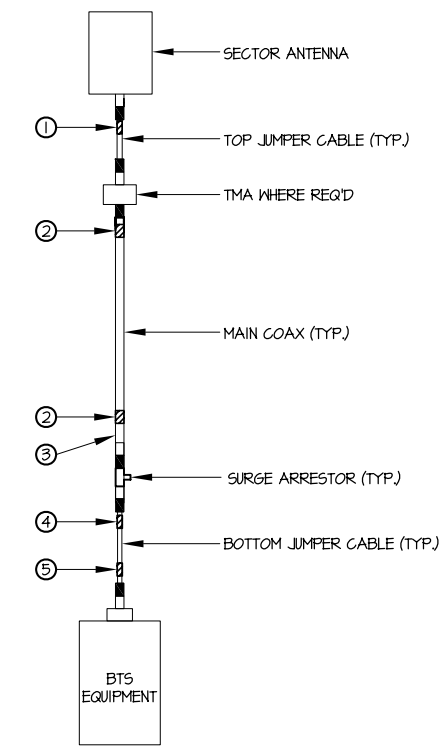

CABLE MARKING LOCATIONS DIAGRAM

CABLE MARKING LOCATIONS TABLE

NO.	TAPE	TAG	LOCATIONS
1.	X		EACH TOP-JUMPER SHALL BE COLOR CODED WITH (1) SET OF 3" WIDE BANDS.
2.	X		EACH MAIN COAX SHALL BE COLOR CODED WITH (1) SET OF 3" WIDE BANDS NEAR THE TOP-JUMPER CONNECTION AND WITH (1) SET OF 3/4" WIDE COLOR BANDS JUST PRIOR TO ENTERING THE BTS OR TRANSMITTER BUILDING.
3.		X	CABLE ENTRY PORT ON THE INTERIOR OF THE SHELTER (IF SHELTER IS USED) OR AT SURGE ARRESTOR RACK.
4.	X		ALL BOTTOM JUMPERS SHALL BE COLOR CODED WITH (1) SET OF 3/4" WIDE BANDS ON EACH END OF THE BOTTOM JUMPER.
5.	*	*	ALL BOTTOM JUMPERS SHALL BE COLOR CODED WITH (1) SET OF 3/4" WIDE BANDS ON EACH END OF THE BOTTOM JUMPER.

(* - DENOTES TAG OR TAPE.)

T-Mobile

T-MOBILE WEST CORPORATION, a DELAWARE CORPORATION
SAN FRANCISCO AREA NEW SITE DEVELOPMENT
1855 GATEWAY BLVD., 9TH FLOOR
CONCORD, CA 94520

PROJECT INFORMATION:

SF23283D
SPRINT MONOPOLE
100 ARMORY DRIVE
SAN FRANCISCO, CA 94321

CURRENT ISSUE DATE:
4/22/10

ISSUED FOR:
CD (100%)

REV.:	DATE:	DESCRIPTION:	BY:
1	8/17/09	CD (90%)	JS
2	10/12/09	CD (100%)	JS
3	11/3/09	CD (100%)	JS
4	3/3/10	CD (100%)	JS
5	4/14/10	CD (100%)	JS
6	4/22/10	CD (100%)	JS

PROJECT ARCHITECT/ENGINEER:

DELTA GROUPS ENGINEERING, INC.
CONSULTING ENGINEERS
5635 WEST LAS POSITAS BOULEVARD, SUITE 403
PLEASANTON, CA 94588
OFFICE: (925) 468-0115
FAX: (925) 468-0335

DGE PROJECT NUMBER: P08TK041
DRAWN BY: JS

CONSULTANT:

DRAWN BY:	CHK.:	APV.:
JS	.	.

LICENSER:

SHEET TITLE:
ANTENNA & CABLE SCHEDULE, NOTES & DETAILS

SHEET NUMBER:
E-6

LEGEND

2

NEW ANTENNA	GROUT OR PLASTER
EXISTING ANTENNA	(E) BRICK
GROUND ROD	(E) MASONRY
GROUND BUS BAR	CONCRETE
MECHANICAL GRND. CONN.	EARTH
GADWELD	GRAVEL
GROUND ACCESS WELL	PLYWOOD
ELECTRIC BOX	SAND
TELEPHONE BOX	WOOD CONT.
LIGHT POLE	WOOD BLOCKING
FND. MONUMENT	STEEL
SPOT ELEVATION	CENTERLINE
SET POINT	PROPERTY/LEASE LINE
REVISION	MATCH LINE
GRID REFERENCE	WORK POINT
DETAIL REFERENCE	GROUND CONDUCTOR
ELEVATION REFERENCE	TELEPHONE CONDUIT
SECTION REFERENCE	ELECTRICAL CONDUIT
	COAXIAL CABLE
	OVERHEAD SERVICE CONDUCTORS
	CHAIN LINK FENCING

ABBREVIATIONS

3

A.B.	ANCHOR BOLT
ABV.	ABOVE
ACCA	ANTENNA CABLE COVER ASSEMBLY
ADD'L	ADDITIONAL
A.F.F.	ABOVE FINISHED FLOOR
A.F.G.	ABOVE FINISHED GRADE
AGL	ABOVE GROUND LEVEL
ALUM.	ALUMINUM
ALT.	ALTERNATE
AMSL	ABOVE SEA LEVEL
ANT.	ANTENNA
APPRX.	APPROXIMATE(LY)
ARCH.	ARCHITECT(URAL)
AWG.	AMERICAN WIRE GAUGE
BLDG.	BUILDING
BLK.	BLOCK
BLKG.	BLOCKING
BM.	BEAM
B.N.	BOUNDARY NAILING
B/U	BACK-UP CABINET
CAB.	CABINET
BTCW.	BARE TINNED COPPER WIRE
B.O.F.	BOTTOM OF FOOTING
CANT.	CANTILEVER(ED)
C.I.P.	CAST IN PLACE
CLG.	CEILING
CLR.	CLEAR
COL.	COLUMN
CONC.	CONCRETE
CONN.	CONNECTION(OR)
CONST.	CONSTRUCTION
CONT.	CONTINUOUS
d	PENNY (NAILS)
DBL.	DOUBLE
DEPT.	DEPARTMENT
D.F.	DOUGLAS FIR
DIA.	DIAMETER
DIAG.	DIAGONAL
DIM.	DIMENSION
DWG.	DRAWING(S)
DWL.	DOWEL(S)
EA.	EACH
EL.	ELEVATION
ELEC.	ELECTRICAL
ELEV.	ELEVATOR
EMT.	ELECTRICAL METALLIC TUBING
E.N.	EDGE NAIL
ENG.	ENGINEER
EQ.	EQUAL
EXP.	EXPANSION
EXST.(E)	EXISTING
EXT.	EXTERIOR
FAB.	FABRICATION(OR)
F.F.	FINISH FLOOR
F.G.	FINISH GRADE
FIN.	FINISH(ED)
FLR.	FLOOR
FDN.	FOUNDATION
F.O.C.	FACE OF CONCRETE
F.O.M.	FACE OF MASONRY
F.O.S.	FACE OF STUD
F.O.W.	FACE OF WALL
F.S.	FINISH SURFACE
FT.(')	FOOT(FEET)
FTG.	FOOTING
G.	GROWTH (CABINET)
GA.	GAUGE
GI.	GALVANIZE(D)
G.F.I.	GROUND FAULT CIRCUIT INTERRUPTER
GLB.(GLU-LAM)	GLUE LAMINATED BEAM
GPS	GLOBAL POSITIONING SYSTEM
GRND.	GROUND
HDR.	HEADER
HGR.	HANGER
HT.	HEIGHT
ICGB.	ISOLATED COPPER GROUND BUS
IN.(")	INCH(ES)
INT.	INTERIOR
LB.(#)	POUND(S)
L.B.	LAG BOLTS
L.F.	LINEAR FEET (FOOT)
L.	LONG(ITUDINAL)
MAS.	MASONRY
MAX.	MAXIMUM
M.B.	MACHINE BOLT
MECH.	MECHANICAL
MFR.	MANUFACTURER
MIN.	MINIMUM
MISC.	MISCELLANEOUS
MTL.	METAL
(N)	NEW
NO.(#)	NUMBER
N.T.S.	NOT TO SCALE
O.C.	ON CENTER
OPNG.	OPENING
P/C	PRECAST CONCRETE
PCS	PERSONAL COMMUNICATION SERVICES
PLY.	PLYWOOD
PPC	POWER PROTECTION CABINET
PRC	PRIMARY FLEXENT CABINET
P.S.F.	POUNDS PER SQUARE FOOT
P.S.I.	POUNDS PER SQUARE INCH
P.T.	PRESSURE TREATED
PWR.	POWER (CABINET)
QTY.	QUANTITY
RAD.(R)	RADIUS
REF.	REFERENCE
REINF.	REINFORCEMENT(ING)
REQ'D.	REQUIRED
RGS.	RIGID GALVANIZED STEEL
SCH.	SCHEDULE
SHT.	SHEET
SIM.	SIMILAR
SPEC.	SPECIFICATION(S)
SQ.	SQUARE
S.S.	STAINLESS STEEL
STD.	STANDARD
STL.	STEEL
STRUC.	STRUCTURAL
TEMP.	TEMPORARY
THK.	THICK(NESS)
T.N.	TOE NAIL
T.O.A.	TOP OF ANTENNA
T.O.C.	TOP OF CURB
T.O.F.	TOP OF FOUNDATION
T.O.P.	TOP OF PLATE (PARAPET)
T.O.S.	TOP OF STEEL
T.O.W.	TOP OF WALL
TYP.	TYPICAL
U.G.	UNDER GROUND
U.L.	UNDERWRITERS LABORATORY
U.N.O.	UNLESS NOTED OTHERWISE
V.I.F.	VERIFY IN FIELD
W	WIDE(WIDTH)
W/	WITH
WD.	WOOD
W.P.	WEATHERPROOF
WT.	WEIGHT
℄	CENTERLINE
PL	PLATE

DRAWING SPECIFICATIONS

1. THE LATEST EDITION OF THE AMERICAN INSTITUTE OF ARCHITECTS DOCUMENT A201, "GENERAL CONDITIONS OF THE CONTRACT FOR CONSTRUCTION," ARE INCLUDED IN THESE SPECIFICATIONS AS IF COMPLETELY REPRODUCED HEREIN.

2. THIS FACILITY IS AN UNOCCUPIED PCS TELECOMMUNICATIONS SITE AND IS EXEMPT FROM DISABLED ACCESS REQUIREMENTS.

3. THE DRAWINGS SHALL NOT BE SCALED. FIGURED DIMENSIONS HAVE PRECEDENCE OVER THE DRAWING SCALE. DETAIL DRAWINGS HAVE PRECEDENCE OVER SMALL SCALE DRAWINGS. THE CONTRACTOR SHALL CHECK THE ACCURACY OF ALL DIMENSIONS IN THE FIELD. UNLESS SPECIFICALLY NOTED, DO NOT FABRICATE ANY MATERIALS OR BEGIN ANY CONSTRUCTION UNTIL THE ACCURACY OF THE DRAWING DIMENSIONS HAVE BEEN VERIFIED AGAINST ACTUAL FIELD DIMENSIONS.

4. ALL SYMBOLS AND ABBREVIATIONS USED ON THE DRAWINGS ARE CONSIDERED CONSTRUCTION STANDARDS. IF THE CONTRACTOR HAS QUESTIONS REGARDING THEIR EXACT MEANING, THE PROJECT MANAGER AND THE ARCHITECT SHALL BE NOTIFIED FOR CLARIFICATION PRIOR TO PROCEEDING WITH THE WORK.

5. THE DETAILS ARE INTENDED TO SHOW THE END RESULT OF THE DESIGN. MINOR MODIFICATIONS MAY BE REQUIRED TO SUIT JOB DIMENSIONS OR CONDITIONS. SUCH MODIFICATIONS SHALL BE INCLUDED AS PART OF THE WORK.

6. REPRESENTATIONS OF THE TRUE NORTH, OTHER THAN THOSE FOUND ON THE PLOT OF THE SURVEY DRAWING, SHALL NOT BE USED TO IDENTIFY OR ESTABLISH THE BEARING OF TRUE NORTH. THE CONTRACTOR SHALL RELY SOLELY ON THE PLOT OF THE SURVEY DRAWING AND ANY SURVEYOR MARKINGS AT THE SITE FOR THE ESTABLISHMENT OF TRUE NORTH. IF ANY DISCREPANCY IS FOUND BETWEEN THE VARIOUS ELEMENTS OF THE WORKING DRAWINGS AND THE TRUE NORTH ORIENTATION AS DEPICTED ON THE CIVIL SURVEY, THE CONTRACTOR SHALL NOTIFY THE ARCHITECT/ENGINEER PRIOR TO PROCEEDING WITH THE WORK. THE CONTRACTOR SHALL ASSUME SOLE LIABILITY FOR ANY FAILURE TO NOTIFY THE ARCHITECT/ENGINEER.

7. THESE CONSTRUCTION DRAWING DESCRIBE THE WORK TO BE DONE AND THE MATERIALS TO BE FURNISHED FOR CONSTRUCTION.

8. THE INTENTION OF THE DOCUMENT IS TO INCLUDE ALL LABOR AND MATERIALS REASONABLY NECESSARY FOR THE PROPER EXECUTION AND COMPLETION OF THE WORK AS STIPULATED IN THE CONTRACT.

9. THE PURPOSE OF THE SPECIFICATIONS IS TO INTERPRET THE INTENT OF THE DRAWINGS AND TO DESIGNATE THE METHOD OF THE PROCEDURE, TYPE, AND QUALITY OF MATERIALS REQUIRED TO COMPLETE THE WORK.

10. MINOR DEVIATIONS FROM THE DESIGN LAYOUT ARE ANTICIPATED AND SHALL BE CONSIDERED AS PART OF THE WORK. NO CHANGES THAT ALTER THE CHARACTER OF THE WORK WILL BE MADE OR PERMITTED BY THE OWNER WITHOUT ISSUING A CHANGE ORDER.

11. GENERAL ARCHITECTURAL, STRUCTURAL, AND ELECTRICAL DRAWINGS ARE INTERRELATED. IN PERFORMANCE OF THE WORK, THE CONTRACTOR MUST REFER TO ALL DRAWINGS. ALL COORDINATION SHALL BE THE RESPONSIBILITY OF THE CONTRACTOR.

CONTRACTOR SPECIFICATIONS

1. PRIOR TO THE SUBMISSION OF BIDS, THE PARTICIPATING CONTRACTORS SHALL VISIT THE JOB SITE AND FAMILIARIZE THEMSELVES WITH ALL CONDITIONS AFFECTING THE PROPOSED PROJECT, WITH THE CONSTRUCTION AND CONTRACT DOCUMENTS, FIELD CONDITIONS, AND CONFIRM THAT THE PROJECT CAN BE ACCOMPLISHED AS SHOWN, PRIOR TO SUBMISSION OF BIDS AND CONSTRUCTION. SHOULD ANY ERRORS, OMISSIONS, OR DISCREPANCIES BE FOUND, THE GENERAL CONTRACTOR SHALL IMMEDIATELY NOTIFY THE PROJECT MANAGER AND THE ARCHITECT/ENGINEER, IN WRITING. IN THE EVENT OF DISCREPANCIES, THE CONTRACTOR SHALL INCLUDE THE MORE COSTLY OR EXTENSIVE WORK IN THE BID, UNLESS SPECIFICALLY DIRECTED OTHERWISE. IF A DISCREPANCY EXISTS AND THE PROJECT MANAGER AND ARCHITECT/ENGINEER ARE NOT NOTIFIED, THE GENERAL CONTRACTOR SHALL BE HELD RESPONSIBLE FOR ALL COSTS INCURR"

2. EXISTING ELEVATIONS AND LOCATIONS TO BE JOINED SHALL BE VERIFIED BY THE CONTRACTOR BEFORE CONSTRUCTION. IF THEY DIFFER FROM THOSE SHOWN ON THE PLANS, THE CONTRACTOR SHALL NOTIFY THE PROJECT MANAGER AND THE ARCHITECT/ENGINEER, SO THAT MODIFICATIONS CAN BE MADE BEFORE PROCEEDING WITH THE WORK.

3. THE CONTRACTOR SHALL NOTIFY THE PROJECT MANAGER AND THE ARCHITECT/ENGINEER IF ANY OF THE DETAILS ARE CONSIDERED IMPRACTICAL, UNSUITABLE, UNSAFE, NOT WATERPROOFED, OR NOT WITHIN CUSTOMARY TRADE PRACTICE. IF WORK IS PERFORMED, IT WILL BE ASSUMED THAT THERE IS NO OBJECTION TO ANY DETAIL. THE DETAILS ARE INTENDED TO SHOW THE END RESULT OF THE DESIGN. MINOR MODIFICATIONS MAY BE REQUIRED TO SUIT JOB CONDITIONS AND SHALL BE INCLUDED AS PART OF THE WORK.

4. THE CONTRACTOR SHALL OBTAIN, IN WRITING, AUTHORIZATION TO PROCEED BEFORE STARTING WORK ON ANY ITEM NOT CLEARLY DEFINED OR IDENTIFIED BY THE CONTRACT DOCUMENTS.

5. ALL WORK PERFORMED AND MATERIALS INSTALLED SHALL BE IN STRICT ACCORDANCE WITH ALL APPLICABLE CODES, REGULATIONS, AND ORDINANCES. CONTRACTOR SHALL GIVE ALL NOTICES AND COMPLY WITH ALL LAWS, ORDINANCES, RULES, REGULATIONS, AND LAWFUL ORDERS OF ANY PUBLIC AUTHORITY REGARDING THE PERFORMANCE OF THE WORK. MECHANICAL AND ELECTRICAL SYSTEMS SHALL BE INSTALLED IN ACCORDANCE WITH ALL APPLICABLE MUNICIPAL AND UTILITY COMPANY SPECIFICATIONS AND LOCAL AND STATE JURISDICTIONAL CODES, ORDINANCES, AND APPLICABLE REGULATIONS.

6. THE CONTRACTOR AND ALL SUBCONTRACTORS SHALL COMPLY WITH ALL LOCAL CODES, REGULATIONS, AND ORDINANCES, AS WELL AS, STATE DEPARTMENT OF INDUSTRIAL REGULATIONS AND DIVISION OF INDUSTRIAL SAFETY (OSHA) REQUIREMENTS.

7. ALL CONSTRUCTION SHALL BE IN ACCORDANCE WITH CHAPTER 23 OF THE UBC REGARDING EARTHQUAKE PIPING, LIGHT FIXTURES, CEILING GRID, INTERIOR PARTITIONS AND MECHANICAL EQUIPMENT. ALL WORK MUST BE IN ACCORDANCE WITH LOCAL EARTHQUAKE CODES AND REGULATIONS.

D, SUITE 600
ROSEMONT, IL 60018

SMACNA SHEET METAL AND AIR CONDITIONING CONTRACTORS
NATIONAL ASSOCIATION
4201 LAFAYETTE CENTER DRIVE
CHATTILY, VA 22021-1209

ITLP INTERNATIONAL INSTITUTE FOR LATH AND PLASTER
820 TRANSFER ROAD
ST. PAUL, MN 55114-1406

AMA ADHESIVE MANUFACTURERS ASSOCIATION
401 NORTH MICHIGAN AVENUE, SUITE 2400
CHICAGO, IL 60611

9. THE CONTRACTOR SHALL INSTALL ALL EQUIPMENT AND MATERIALS IN ACCORDANCE WITH MANUFACTURER'S RECOMMENDATIONS, UNLESS SPECIFICALLY INDICATED OTHERWISE OR WHERE LOCAL CODES OR REGULATIONS TAKE PRECEDENCE.

10. ALL SITE WORK SHALL BE CAREFULLY COORDINATED BY THE GENERAL CONTRACTOR WITH LOCAL ELECTRICAL COMPANY, TELEPHONE COMPANY, AND ANY OTHER UTILITY COMPANIES HAVING JURISDICTION OVER THIS LOCATION.

11. THE CONTRACTOR SHALL OBTAIN AND PAY FOR PERMITS, LICENSES AND INSPECTIONS NECESSARY FOR PERFORMANCE OF THE WORK AND INCLUDE THOSE IN THE COST OF THE WORK.

12. THE CONTRACTOR SHALL SUPERVISE AND DIRECT ALL WORK, USING HIS BEST SKILL AND ATTENTION. HE SHALL SOLELY BE RESPONSIBLE FOR ALL CONSTRUCTION MEANS, METHODS, TECHNIQUES, PROCEDURES AND SEQUENCES, AND FOR COORDINATING ALL PORTIONS OF THE WORK UNDER THE CONTRACT.

13. THE CONTRACTOR SHALL PROTECT THE PROPERTY OWNERS, PROJECT MANAGER AND THE CARRIER'S PROPERTY FROM DAMAGE WHICH MAY OCCUR DURING CONSTRUCTION. ANY DAMAGE TO NEW AND EXISTING CONSTRUCTION, STRUCTURE, LANDSCAPING, CURBS, STAIRS, EQUIPMENT, ETC., SHALL BE IMMEDIATELY REPAIRED OR REPLACED TO THE SATISFACTION OF THE PROJECT MANAGER, THE PROPERTY OWNER, OR THE OWNER'S REPRESENTATIVE, AT THE EXPENSE OF THE CONTRACTOR.

14. THE CONTRACTOR SHALL BE RESPONSIBLE FOR, AND SHALL REPLACE OR REMEDY, ANY FAULTY, IMPROPER, OR INFERIOR MATERIALS OR WORKMANSHIP, OR ANY DAMAGE WHICH SHALL APPEAR WITHIN ONE YEAR AFTER THE COMPLETION AND ACCEPTANCE OF THE WORK BY DELTA GROUPS ENGINEERING, INC. UNDER THIS CONTRACT.

15. THE CONTRACTOR SHALL VERIFY, COORDINATE, AND PROVIDE ALL NECESSARY BLOCKING, BACKING, FRAMING, HANGERS OR OTHER SUPPORTS FOR ALL ITEMS REQUIRING THE SAME.

16. PENETRATIONS OF ROOF MEMBRANES SHALL BE PATCHED/FLASHED AND MADE WATERTIGHT USING MATERIALS IN ACCORDANCE WITH NRCA ROOFING STANDARDS AND DETAILS. THE CONTRACTOR SHALL OBTAIN DETAILING CLARIFICATION FOR SITE-SPECIFIC CONDITIONS FROM THE ARCHITECT/ENGINEER, IF NECESSARY, BEFORE PROCEEDING.

17. THE CONTRACTOR SHALL CONTACT U.S.A. (UNDERGROUND SERVICE ALERT) BEFORE PROCEEDING WITH ANY EXCAVATION, SITE WORK, OR CONSTRUCTION.

18. DO NOT EXCAVATE OR DISTURB BEYOND THE PROPERTY LINES OR LEASE LINES, UNLESS OTHERWISE NOTED.

19. ALL TEMPORARY EXCAVATIONS FOR THE INSTALLATION OF FOUNDATIONS, UTILITIES, ETC., SHALL BE PROPERLY LAID BACK OR BRACED IN ACCORDANCE WITH CORRECT OCCUPATIONAL SAFETY AND HEALTH ADMINISTRATION (OSHA) REQUIREMENTS.

20. IT SHALL BE THE RESPONSIBILITY OF THE GENERAL CONTRACTOR TO LOCATE ALL EXISTING UTILITIES, WHETHER SHOWN HEREIN OR NOT, AND TO PROTECT THEM FROM DAMAGE. THE CONTRACTOR SHALL BEAR ALL EXPENSES FOR REPAIR OR REPLACEMENT OF UTILITIES OR OTHER PROPERTY DAMAGED IN CONJUNCTION WITH THE EXECUTION OF WORK.

21. THE CONTRACTOR SHALL PROVIDE TEMPORARY WATER, POWER AND TOILET FACILITIES AS REQUIRED BY THE PROPERTY OWNER, THE PROJECT MANAGER, AND THE CITY OR GOVERNING AGENCY.

22. THE CONTRACTOR SHALL REMOVE ALL RUBBISH AND WASTE MATERIALS ON A DAILY BASIS AND SHALL EXERCISE STRICT CONTROL OVER JOB CLEANING THROUGHOUT CONSTRUCTION, INCLUDING FINAL CLEANUP UPON COMPLETION OF WORK. ALL AREAS ARE TO BE LEFT IN A BROOM CLEAN CONDITION AT THE END OF EACH DAY.

23. ALL MATERIALS MUST BE STORED IN A LEVEL AND DRY FASHION, AND IN A MANNER THAT DOES NOT NECESSARILY OBSTRUCT THE FLOW OF OTHER WORK. IN ADDITION, STORAGE METHOD MUST MEET ALL RECOMMENDATIONS OF THE ASSOCIATED MANUFACTURER.

24. THE GENERAL CONTRACTOR MUST PERFORM WORK DURING PROPERTY OWNER'S PREFERRED HOURS TO AVOID DISRUPTION OF NORMAL ACTIVITY.

25. THE CONTRACTOR SHALL BE RESPONSIBLE FOR THE COMPLETE SECURITY OF THE PROJECT SITE WHILE THE JOB IS IN PROGRESS AND UNTIL THE JOB IS COMPLETED AND ACCEPTED BY THE PROJECT MANAGER.

26. THE LATEST EDITION OF ALL PERMITTED AND APPROVED PLANS PERTAINING TO THIS PROJECT SHALL BE KEPT IN A PLAN BOX AND SHALL NOT BE USED BY THE WORKERS. ALL CONSTRUCTION SETS SHALL REFLECT THE SAME INFORMATION. THE CONTRACTOR MUST ALSO MAINTAIN IN GOOD CONDITION, ONE COMPLETE SET OF PLANS WITH ALL REVISIONS, ADDENDA AND CHANGE ORDERS ON THE PREMISES AT ALL TIMES. THESE ARE TO BE UNDER THE CARE OF THE JOB SUPERINTENDENT.

27. THE CONTRACTOR SHALL PROVIDE A CLOSE-OUT PACKAGE TO THE PROJECT MANAGER, WHICH WILL INCLUDE:

A. BUILDING PERMITS/ELECTRICAL PERMITS
B. FINAL INSPECTION CARD
C. STAMPED BUILDING PERMIT PLANS
D. GROUNDING TEST
E. SWEEP TEST
F. CONCRETE TEST
G. SPECIAL INSPECTION REPORTS
H. WARRANTIES, MANUAL, EQUIPMENT SPECIFICATIONS
I. SUBCONTRACTOR CONTACT LIST
J. REDLINED AS-BUILTS
K. CONSTRUCTION PROCESS PHOTOS
L. SITE COMPLETION PHOTOS
M. A WRITTEN REPORT ON ANTENNA SERIAL NUMBER FOR EACH SECTOR
N. MANUFACTURER'S PERFORMANCE REPORT FOR EACH ANTENNA

ENGINEERING REQUIREMENTS

1. ALL EXPOSED METAL SHALL BE HOT-DIPPED GALVANIZED.

2. SEAL ALL PENETRATIONS THROUGH FIRE-RATED AREAS WITH U.L. LISTED OR FIRE MARSHALL APPROVED MATERIALS IF AND WHERE APPLICABLE TO THIS FACILITY AND PROJECT SITE.

3. ALL NEW OPENINGS IN THE EXTERIOR ENVELOPE OF CONDITIONED SPACES SUCH AS, AT WALL AND ROOF PENETRATIONS, SHALL BE CAULKED OR SEALED TO LIMIT INFILTRATION OF AIR AND MOISTURES.

4. THE ELECTRICAL POWER SYSTEM SHALL BE GROUNDED PER NEC ARTICLES 250 AND 810.

5. THE CONTRACTOR SHALL SUBMIT SHOP DRAWINGS AS REQUIRED AND LISTED IN THESE DRAWINGS TO THE PROJECT MANAGER FOR APPROVAL. ALL SHOP DRAWINGS SHALL BE REVIEWED, CHECKED AND CORRECTED BY THE CONTRACTOR PRIOR TO SUBMITTAL TO THE PROJECT MANAGER.

6. THE CONTRACTOR SHALL SUBMIT THREE COPIES OF EACH REQUEST FOR SUBSTITUTIONS. IN EACH REQUEST, IDENTIFY THE PRODUCT, FABRICATION OR INSTALLATION METHOD TO BE REPLACED BY THE SUBSTITUTION. INCLUDE RELATED SPECIFICATION SECTION AND DRAWING NUMBERS AND COMPLETE DOCUMENTATION SHOWING COMPLIANCE WITH THE REQUIREMENTS FOR SUBSTITUTIONS.

7. THE CONTRACTOR SHALL SUBMIT ALL NECESSARY PRODUCT DATA AND CUT SHEETS WHICH PROPERLY INDICATE AND DESCRIBE THE ITEMS, PRODUCTS AND MATERIALS BEING INSTALLED. THE CONTRACTOR SHALL, IF DEEMED NECESSARY BY THE PROJECT MANAGER, SUBMIT ACTUAL SAMPLES TO DELTA GROUPS ENGINEERING, INC. FOR APPROVAL, IN LIEU OF CUT SHEETS.

8. CHANGE ORDERS MAY BE INITIATED BY THE PROJECT MANAGER AND/OR THE CONTRACTOR INVOLVED. THE CONTRACTOR, UPON VERBAL REQUEST FROM THE PROJECT MANAGER, SHALL PREPARE A WRITTEN PROPOSAL DESCRIBING THE CHANGE IN WORK OR MATERIALS AND ANY CHANGES IN THE CONTRACT AMOUNT AND PRESENT IT TO THE PROJECT MANAGER WITHIN SEVENTY-TWO HOURS FOR APPROVAL. SUBMIT REQUESTS FOR SUBSTITUTIONS IN THE FORM AND IN ACCORDANCE WITH PROCEDURES REQUIRED FOR CHANGE ORDER PROPOSALS. ANY CHANGES IN THE SCOPE OF WORK OR MATERIALS WHICH ARE PERFORMED BY THE CONTRACTOR WITHOUT A WRITTEN CHANGE ORDER AS DESCRIBED AND APPROVED BY THE PROJECT MANAGER SHALL PLACE FULL RESPONSIBILITY OF THESE ACTIONS ON THE CONTRACTOR.

GENERAL REQUIREMENTS

1. PROVIDE A PORTABLE FIRE EXTINGUISHER WITH A RATING OF NOT LESS THAN 2-A OR 2-A10BC WITHIN 75 FEET TRAVEL DISTANCE TO ALL PORTIONS OF THE PROJECT CONSTRUCTION AREA.

2. THE CONTRACTOR SHALL, AT THEIR OWN EXPENSE, CARRY AND MAINTAIN FOR THE DURATION OF THE PROJECT, ALL INSURANCE AS REQUIRED AND LISTED. THE CONTRACTOR SHALL NOT COMMENCE WITH THEIR WORK UNTIL THEY HAVE PRESENTED AN ORIGINAL CERTIFICATE OF INSURANCE, STATING ALL COVERAGE, TO THE CELLULAR CARRIER. THE CELLULAR CARRIER SHALL BE NAMED AS AN ADDITIONAL COMPANY INSURED ON ALL POLICIES.

3. THE CONTRACTOR SHALL BE RESPONSIBLE FOR VERIFICATION OF ALL MEASUREMENTS AT THE SITE BEFORE ORDERING ANY MATERIALS OR DOING ANY WORK. NO EXTRA CHARGE OR COMPENSATION SHALL BE ALLOWED DUE TO DIFFERENCE BETWEEN ACTUAL DIMENSIONS AND DIMENSIONS INDICATED IN THE CONSTRUCTION DRAWINGS. ANY SUCH DISCREPANCY IN DIMENSIONS, WHICH MAY BE FOUND, SHALL BE SUBMITTED TO THE PROJECT MANAGER FOR CONSIDERATION BEFORE THE CONTRACTOR PROCEEDS WITH THE WORK IN THE AFFECTED AREAS.

4. THE BIDDER, IF AWARDED THE CONTRACT, WILL NOT BE ALLOWED ANY EXTRA COMPENSATION BY REASON OF ANY MATTER OR THING CONCERNING WHICH SUCH BIDDER MIGHT HAVE FULLY INFORMED THEMSELVES PRIOR TO THE BIDDING.

5. NO PLEA OF IGNORANCE OF CONDITIONS THAT EXIST, OR OF DIFFICULTIES OR CONDITIONS THAT MAY BE ENCOUNTERED OR OF ANY OTHER RELEVANT MATTER CONCERNING THE WORK TO BE PERFORMED IN THE EXECUTION OF THE WORK WILL BE ACCEPTED AS AN EXCUSE FOR ANY FAILURE OR OMISSION ON THE PART OF THE CONTRACTOR TO FULFILL EVERY DETAIL OF ALL THE REQUIREMENTS OF THE CONTRACT DOCUMENTS GOVERNING THE WORK.

6. BEFORE COMMENCEMENT OF ANY WORK, THE CONTRACTOR WILL ASSIGN A PROJECT MANAGER WHO WILL ACT AS A SINGLE POINT OF CONTACT FOR ALL PERSONNEL INVOLVED IN THIS PROJECT. THE PROJECT MANAGER WILL DEVELOP A MASTER SCHEDULE FOR THE PROJECT WHICH WILL BE SUBMITTED TO THE CELLULAR CARRIER'S PROJECT MANAGER PRIOR TO THE COMMENCEMENT OF ANY WORK.

7. THE CONTRACTOR SHALL SUBMIT A BAR TYPE PROGRESS CHART NOT MORE THAN THREE DAYS AFTER THE DATE ESTABLISHED FOR COMMENCEMENT OF THE WORK ON THE SCHEDULE. IT SHALL INDICATE A TIME BAR FOR EACH MAJOR CATEGORY OF WORK TO BE PERFORMED AT THE SITE, PROPERLY SEQUENCED AND COORDINATED WITH OTHER ELEMENTS OF WORK AND SHOWING COMPLETION OF THE WORK SUFFICIENTLY IN ADVANCE OF THE DATE ESTABLISHED FOR SUBSTANTIAL COMPLETION OF THE SITE.

8. THE CONTRACTOR SHALL PROVIDE WRITTEN DAILY UPDATES ON SITE PROGRESS TO THE PROJECT MANAGER.

9. A COMPLETE INVENTORY OF CONSTRUCTION MATERIALS AND EQUIPMENT IS REQUIRED PRIOR TO THE START OF CONSTRUCTION.

10. NOTIFY THE PROJECT MANAGER IN WRITING NO LESS THAN FORTY-EIGHT HOURS IN ADVANCE OF CONCRETE POURS, TOWER ERECTIONS, AND EQUIPMENT CABINET PLACEMENTS.

11. THE CONTRACTOR SHALL BE EQUIPPED WITH SOME MEANS OF CONSTANT COMMUNICATIONS, SUCH AS A MOBILE PHONE OR A BEEPER. THIS EQUIPMENT WILL NOT BE SUPPLIED BY THE CELLULAR CARRIER, NOR WILL WIRELESS SERVICE BE ARRANGED.

12. DURING CONSTRUCTION, THE CONTRACTOR MUST ENSURE THAT EMPLOYEES AND SUBCONTRACTORS WEAR HARD HATS AT ALL TIMES. CONTRACTOR WILL COMPLY WITH ALL SAFETY REQUIREMENTS IN THEIR AGREEMENT.

13. ALL METALLIC MATERIALS & HARDWARE SHOULD BE GALVANIZED OR STAINLESS STEEL

GENERAL NOTES

1

T-Mobile

T-MOBILE WEST CORPORATION, a DELAWARE CORPORATION
SAN FRANCISCO AREA NEW SITE DEVELOPMENT
1855 GATEWAY BLVD., 9TH FLOOR
CONCORD, CA 94520

PROJECT INFORMATION:

SF23283D
SPRINT MONOPOLE
100 ARMORY DRIVE
SAN FRANCISCO, CA 94321

CURRENT ISSUE DATE:
4/22/10

ISSUED FOR:
CD (100%)

REV.:	DATE:	DESCRIPTION:	BY:
1	8/17/09	CD (90%)	JS
2	10/12/09	CD (100%)	JS
3	11/3/09	CD (100%)	JS
4	3/3/10	CD (100%)	JS
5	4/14/10	CD (100%)	JS
6	4/22/10	CD (100%)	JS

PROJECT ARCHITECT/ENGINEER:

DELTA GROUPS ENGINEERING, INC.
CONSULTING ENGINEERS
5635 WEST LAS POSITAS BOULEVARD,
SUITE 403
PLEASANTON, CA 94588
OFFICE: (925) 468-0115
FAX: (925) 468-0335

DGE PROJECT NUMBER: P08TK041
DRAWN BY: JS

CONSULTANT:

DRAWN BY:	CHK.:	APV.:
JS	.	.

LICENSER:

SHEET TITLE:
GENERAL NOTES, LEGEND, & ABBREVIATIONS

SHEET NUMBER:
N-1

MATERIAL SAFETY DATA SHEET
LEAD ACID BATTERY
NORTHSTAR BATTERY COMPANY
Springfield, Missouri

I. PRODUCT IDENTIFICATION:

A. Chemical/Trade Name (per on label): Lead Acid Battery

B. Chemical Family/Classification: Electrical Storage Battery

C. Manufacturer's Name & Address: NorthStar Battery Co. LLC
4000 Continental Way
Springfield, MO 65803

D. Contact: U.S. - NSB Safety and Health Department
Phone: (417) 575-8219
Fax: (417) 575-8250
Aust. Power-One Energy Solutions Pty Ltd.
Phone: +612 9889 3111

E. Emergency Information: Chemtrec (US, Canada & Mexico)
Phone: (800) 424-9300
Chemtrec (Outside US, Canada & Mexico)
Phone: +1 (703) 527-3887 (call collect)

F. Non-Hazardous Classification
Per US DOT, Northstar Battery Company products, submitted and tested by Wyle Labs, have been deemed to meet all requirements as specified in 49CFR§ 173.159 (d) for **exception as** hazardous material classification.

II. HAZARDOUS INGREDIENTS/IDENTITY INFORMATION:

NORTH AMERICAN INFORMATION

Materials	% by Wt.	CAS Number	Air Exposure Limits (ug/m³) OSHA	ACGIH (TLV)	NIOSH
Lead	57	7439-92-1	50	150	100
Lead Oxide	22	1309-60-0	50	150	100
Electrolyte (Sulfuric Acid) 1.400 sg	14	7664-93-9	1	1	1

AUSTRALIAN INFORMATION

Chemical or Material	Australian Dangerous Goods Classification	Hazardous Substance Classification as per NOHSC Australia	Australian Poison Schedule Classification
Non-Spillable Lead Acid Battery	Exempt under ADT (IATA Identification Guide) and Clause 238 of the Australian Dangerous Goods Code, Appendix 3	Hazardous	Schedule 6 Agricultural, Domestic and Industrial Substances

Note: Product contains toxic chemicals that are subject to the reporting requirements of Section 302 and 313 of the Emergency Planning and Community Right-to-Know Act of 1986.

III. PHYSICAL DATA:

Material is solid at normal temperatures.

A. Electrolyte:
1. Specific Gravity: 1.250 – 1.350 kg/dm³

Date: 04/06/2005 | DCR: 621-505 | ISO Clause: 4.3.1 | DOC Code: MSD-420-01-05 | Page: 1 of 6

PAGE 1

MATERIAL SAFETY DATA SHEET
LEAD ACID BATTERY
NORTHSTAR BATTERY COMPANY
Springfield, Missouri

2. Boiling Point: 110°C (230°F)
3. % Volatiles By Weight: Not Applicable
4. Solubility in Water: 100%
5. Melting Point Lead: 327°C (621°F)
6. Vapor Density Not Determined

B. Appearance and Odor
1. Electrolyte is a clear liquid with an acidic odor.

IV. HEALTH HAZARD INFORMATION:

Under normal operating conditions, because the battery is "non-spillable", the internal material will not be hazardous to your health. Only internally exposed material during production or case breakage or extreme heat (fire) may be hazardous to your health.

A. Routes of Entry:
1. Inhalation: Acid mist from formation process may cause respiratory irritation.
2. Skin Contact: Acid may cause irritation, burns and/or ulceration.
3. Skin Absorption Not a significant route of entry.
4. Eye Contact: Acid may cause sever irritation, burns, cornea damage and/or blindness.
5. Ingestion: Acid may cause irritation of mouth, throat, esophagus and stomach.

B. Signs and Symptoms of Over Exposure:
1. Acute Effects: Over exposure to lead may lead to loss of appetite, constipation, sleeplessness and fatigue. Over exposure to acid may lead to skin irritation, corneal damage of the eyes and upper respiratory system.
2. Chronic Effects: Lead and its components may cause damage to kidneys and nervous system. Acid and its components may cause lung damage and pulmonary conditions.
3. Potential to Cause Cancer: The International Agency for Research on Cancer has classified "strong inorganic acid mist containing sulfuric acid" as a Category 1 carcinogen, a substance that is carcinogenic to humans. This classification does not apply to liquid forms of sulfuric acid or sulfuric acid solutions contained within a battery. Inorganic acid mist is not generated under normal use of this product. Misuse of the product, such as overcharging, may however result in the generation of sulfuric acid mist.

C. Emergency and First Aid Procedures:
1. Inhalation: Remove from exposure, move to fresh air, and apply oxygen if breathing is difficult. Consult physician immediately.
2. Skin: Wash with plenty of soap and water for at least 15 minutes. Remove any contaminated clothing. Consult physician if skin irritation appears.
3. Eyes: Flush with plenty of water immediately for at least 15 minutes, lifting lower

Date: 04/06/2005 | DCR: 621-505 | ISO Clause: 4.3.1 | DOC Code: MSD-420-01-05 | Page: 2 of 6

PAGE 2

MATERIAL SAFETY DATA SHEET
LEAD ACID BATTERY
NORTHSTAR BATTERY COMPANY
Springfield, Missouri

and upper eyelids occasionally. Consult a physician immediately.
4. Ingestion: Do not induce vomiting. Give large quantities of water. Never give anything by mouth to an unconscious person. Consult a physician immediately.

D. HANDLING AND STORAGE
1. Safe Storage: Store in a cool, dry place in closed containers. Keep away from ignition sources and high temperatures.
   1. Contact NorthStar Battery Company (417-575-8200) for shelf life information.
2. Handling: Avoid skin or eye contact. Avoid breathing vapors. Do not use near sources of ignition

V. CARCINOGENICITY: See section IV, Part B "Signs and Symptoms of Over Exposure"
MEDICAL CONDITIONS AGGRAVATED BY EXPOSURE: See section IV, Part B "Signs and Symptoms of Over Exposure"

VI. FIRE AND EXPLOSION HAZARD DATA:

A. Flash Point: Hydrogen = 259°C

B. Auto ignition Temperature: Hydrogen = 580°C

C. Extinguishing Media: Dry chemical, foam, CO_2

D. Unusual Fire and Explosion Hazards: Hydrogen and oxygen gases are produced in the cells during normal battery operation (hydrogen is flammable and oxygen supports combustion). These gases enter the air through the vent caps. To avoid the chance of a fire or explosion, keep sparks and other sources of ignition away from the battery.

E. Firefighting PPE: Full protective clothing and
NIOSH-approved self-contained breathing apparatus with full facepiece

VII. REACTIVITY DATA:

A. Stability: Stable

B. Conditions to Avoid: Sparks and other sources of ignition.

C. Incompatibility: (materials to avoid)
1. Lead/lead compounds: Potassium, carbides, sulfides, peroxides, phosphorus, sulfur.
2. Battery electrolyte (acid): Combustible materials, strong reducing agents, most metals, carbides, organic materials, chlorates, nitrates, picrates, and fulminates.

D. Hazardous Decomposition Products:
1. Lead/lead compounds: Oxides of lead and sulfur.

Date: 04/06/2005 | DCR: 621-505 | ISO Clause: 4.3.1 | DOC Code: MSD-420-01-05 | Page: 3 of 6

PAGE 3

MATERIAL SAFETY DATA SHEET
LEAD ACID BATTERY
NORTHSTAR BATTERY COMPANY
Springfield, Missouri

2. Battery electrolyte (acid): Hydrogen, sulfur dioxide, and sulfur trioxide.

E. Conditions to Avoid:
High temperature. Battery electrolyte (acid) will react with water to produce heat. Can react with oxidizing or reducing agents.

VIII. CONTROL MEASURES:

A. Engineering Controls:
Store lead/acid batteries with adequate ventilation. Room ventilation is required for batteries utilized for standby power generation. Never recharge batteries in an unventilated, enclosed space.

B. Work Practices:
Do not remove vent covers. Follow shipping and handling instructions which are applicable to the battery type. To avoid damage to terminals and seals, do not double-stack industrial batteries.

C. Personal Protective Equipment:
1. Respiratory Protection: None required under normal handling conditions. During battery formation (high-rate charge condition), acid mist can be generated which may cause respiratory irritation. Also, if acid spillage occurs in a confined space, exposure may occur. If irritation occurs, wear a respirator suitable for protection against acid mist.
2. Eyes and Face: Chemical splash goggles are preferred. Also acceptable are "Visor-gogs" or a chemical face shield worn over safety glasses.
3. Hands, Arms, Body: Vinyl coated, VC, gauntlet type gloves with rough finish are preferred.
4. Other Special Clothing and Equipment: Safety shoes are recommended when handling batteries. All footwear must meet requirements of ANSI Z41.1 -Rev. 1972.

IX. ACCIDENTAL RELEASE MEASURES:

A. Not applicable under normal conditions.

B. In case of damage resulting in breakage of the battery container, see VIII, Sec. C Personal Protective Equipment.

X. PRECAUTIONS FOR SAFE HANDLING AND USE:

A. Hygiene Practices: Following contact with internal battery components, wash hands thoroughly before eating, drinking, or smoking.

B. Respiratory Protection: Wear safety glasses. Do not permit flames or sparks in the vicinity of battery(s). If battery electrolyte (acid) comes in contact with clothing, discard clothing.

Date: 04/06/2005 | DCR: 621-505 | ISO Clause: 4.3.1 | DOC Code: MSD-420-01-05 | Page: 4 of 6

PAGE 4

MATERIAL SAFETY DATA SHEET
LEAD ACID BATTERY
NORTHSTAR BATTERY COMPANY
Springfield, Missouri

C. Protective Measures:
1. Remove combustible materials and all sources of ignition. Cover spills with soda ash (sodium carbonate) or quicklime (calcium oxide). Mix well. Make certain mixture is neutral, then collect residue and place in a drum or other suitable container. Dispose of as hazardous waste.
2. Wear acid-resistant boots, chemical face shield, chemical splash goggles, and acid-resistant gloves. Do not release unneutralized acid.

D. Waste Disposal Method (*):
1. Battery electrolyte (acid): Neutralize as above for a spill, collect residue, and place in a drum or suitable container. Dispose of as hazardous waste.
2. Do not flush lead contaminated acid to sewer.
3. In case of accidental spill, utilize personal protective equipment, i.e., face shield, rubber apron, rubber safety shoes.
4. Batteries: Send to lead smelter for reclamation following applicable Federal, State and local regulations. Product can be recycled along with automotive (SLI) lead acid batteries.
5. Battery may be returned, shipping pre-paid, to the manufacturer or any distributor for recycling. See 1.C for manufacturer's address or visit our web site @ www.northstarbattery.com.

*In accordance to Local, State and Federal regulations and laws.

E. Other Handling and Storage Precautions: None Required.

XI. ECOLOGICAL INFORMATION:

Lead and its compounds can pose a threat if released to the environment.
See Waste Disposal Method in Section X, Part D.

XII. NFPA HAZARD RATING: SULFURIC ACID:

Flammability (Red)	=	0
Health (Blue)	=	3
Reactivity (Yellow)	=	1

Date: 04/06/2005 | DCR: 621-505 | ISO Clause: 4.3.1 | DOC Code: MSD-420-01-05 | Page: 5 of 6

PAGE 5

MATERIAL SAFETY DATA SHEET
LEAD ACID BATTERY
NORTHSTAR BATTERY COMPANY
Springfield, Missouri

XIII. DEPARTMENT OF TRANSPORTATION AND INTERNATIONAL SHIPPING REGULATIONS:

Proper Shipping Name	UN2800 - Battery, wet, non-spillable (electric storage)
IATA	Batteries must be packed to protect against short circuits and firmly secured to skids or pallets. Packaging instruction 806 Not restricted per special provision A67.
US DOT	Northstar Battery Company products, submitted and tested by Wyle Labs, have been deemed to meet all requirements as specified in 49CFR§ 173.159 (d) for exception as hazardous material classification.
IMDG	Northstar Battery Company products, submitted and tested by Wyle Labs, have been deemed to meet all requirements as specified in special provision 238 for determination of "Non-Spillable" and are not subject to the provision of this Code.

XIV. SPECIAL REQUIREMENTS:
TLV
- Sulfuric Acid - Occupation Exposure Limit - AUSTRALIA TWA 1mg/m3,JAN1993
- Lead - Occupation Exposure Limit - AUSTRALIA TWA 0.15 mg/m3, 2002

Date: 04/06/2005 | DCR: 621-505 | ISO Clause: 4.3.1 | DOC Code: MSD-420-01-05 | Page: 6 of 6

PAGE 6

T-Mobile
T-MOBILE WEST CORPORATION, a DELAWARE CORPORATION
SAN FRANCISCO AREA NEW SITE DEVELOPMENT
1855 GATEWAY BLVD., 9TH FLOOR
CONCORD, CA 94520

PROJECT INFORMATION:
SF23283D
SPRINT MONOPOLE
100 ARMORY DRIVE
SAN FRANCISCO, CA 94321

CURRENT ISSUE DATE:
4/22/10

ISSUED FOR:
CD (100%)

REV.:	DATE:	DESCRIPTION:	BY:
1	8/17/09	CD (90%)	JS
2	10/12/09	CD (100%)	JS
3	11/3/09	CD (100%)	JS
4	3/3/10	CD (100%)	JS
5	4/14/10	CD (100%)	JS
6	4/22/10	CD (100%)	JS

PROJECT ARCHITECT/ENGINEER:
DELTA GROUPS ENGINEERING, INC.
CONSUL
5635 WEST LAS POSITAS BOULEVARD,
SUITE 403
PLEASANTON, CA 94588
OFFICE: (925) 468-0115
FAX: (925) 468-0335
041
DRAWN BY: JS

CONSULTANT:

DRAWN BY:	CHK.:	APV.:
JS	.	.

LICENSER:

SHEET TITLE:
BATTERIES-MATERIAL SAFETY DATA SHEET

SHEET NUMBER:
N-2